IDRO SERVICE

WATER TREATMENT COMPONENTS

Advanced Composite Technologies tanks for water treatment plants

Pressure tanks for softeners and filters with high mechanical and pressure resistance.

Built with an inner liner in polyethylene food grade and externally covered with a laminated shell of epoxy resin reinforced with fiberglass.

The quality of the ACT tanks is guaranteed by a construction fully automated by the lines for blowing the inside shell and construction of the outer filaments.

ACT Advanced Composite Technologies

PRODOTTO CERTIFICATO a norma DM 174/04 ACQUE POTABILI

MADE IN EUROPE

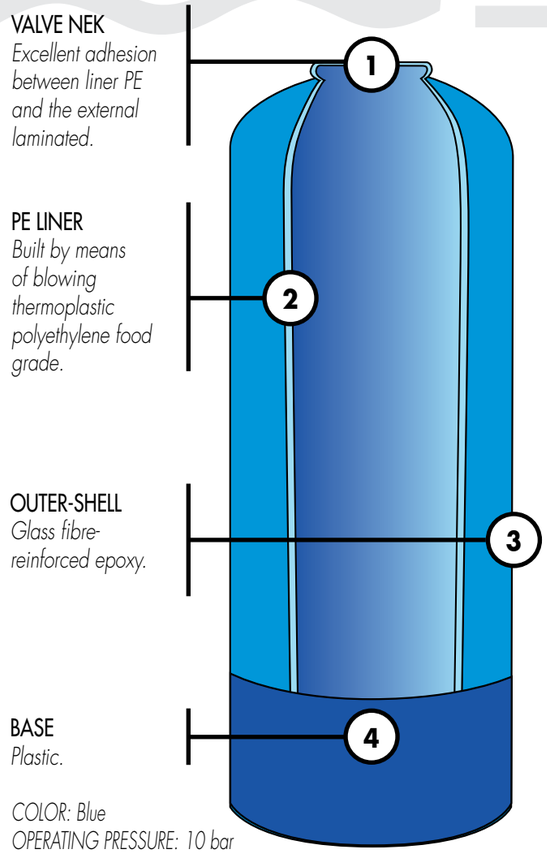

VALVE NEK
Excellent adhesion between liner PE and the external laminated.

PE LINER
Built by means of blowing thermoplastic polyethylene food grade.

OUTER-SHELL
Glass fibre-reinforced epoxy.

BASE
Plastic.

COLOR: Blue
OPERATING PRESSURE: 10 bar

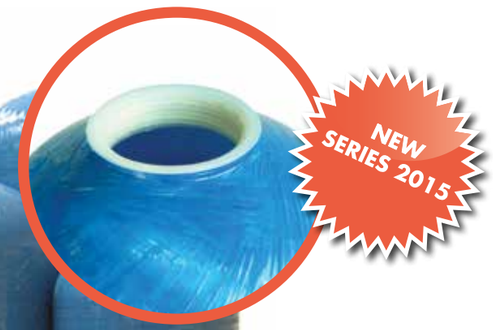

DIMENSIONS

Code	Volume (l)	External diameter (mm)	Maximum height (mm)	Connections	Weight (kg)
BVTR8X35ACT	27	210	902	2"1/2 UN	3,4
BVTR8X44ACT	35	210	1124	2"1/2 UN	3,8
BVTR10X16ACT	16	257	450	2"1/2 UN	2,6
BVTR10X35ACT	40	257	927	2"1/2 UN	4,5
BVTR10X44ACT	50	257	1122	2"1/2 UN	5,5
BVTR10X54ACT	64	257	1385	2"1/2 UN	6,7
BVTR12X48ACT	80	304	1235	2"1/2 UN	7,3
BVTR13X54ACT	104	334	1376	2"1/2 UN	8,5
BVTR14X65ACT	147	369	1655	4" UN	16,4
BVTR16X65ACT	180	406	1655	4" UN	20,0
BVTR18X65ACT	265	469	1681	4" UN	24,0
BVTR21X60ACT	332	533	1580	4" UN	25,0
BVTR24X72ACT	491	610	2085	4" UN	33,3
BVTR30X72ACT	695	770	2199	4" UN TOP + BOTTOM	90,5
BVTR36X72ACT	1010	920	2147	4" UN TOP + BOTTOM	123,0

Code	Euro
BVTR8X35ACT	
BVTR8X44ACT	
BVTR10X16ACT	
BVTR10X35ACT	
BVTR10X44ACT	
BVTR10X54ACT	
BVTR12X48ACT	
BVTR13X54ACT	

Code	Euro
BVTR14X65ACT	
BVTR16X65ACT	
BVTR18X65ACT	
BVTR21X60ACT	
BVTR24X72ACT	
BVTR30X72ACT	
BVTR36X72ACT	

N.B. Tank's prices of 8",10",12" and 13" are referred to pallets.
To purchase of single tank increase the price of 15%

Carbon steel tanks

Carbon steel pressure tanks designed for water softeners and filters. They are equipped with upper and lower socket; IN-OUT side connections threaded and/or flanged; upper lifting hooks; upper handhole and lower manhole of the appropriate size for inspection and filling/emptying with filter material. Automatic welding procedure type MIG/MAG.

Corrosion protection by means of the following coating cycles:

INTERNALLY:
sandblasting process grade SA 2 ½ - 3 and application of epoxy primer. Finish with a double layer of epoxy paint solvent-free, non-toxic, food-grade (total thickness: approx. 250 µ). Paint certified for use with drinking water;

EXTERNALLY:
sandblasting process grade SA 2 ½ -3 and application of epoxy primer. Finish with a layer of enamel (total thickness: approx. 100 µ).

Max working pressure 5 bar (ambient temperature)

Tanks SZ60, SZ65 and SZ80 have a 4" top socket with a thread for the installation of valves Autotrol, Fleck, Siata etc.
The tanks can be supplied equipped with internal distribution pre-installed and tested at the factory (version KIT).

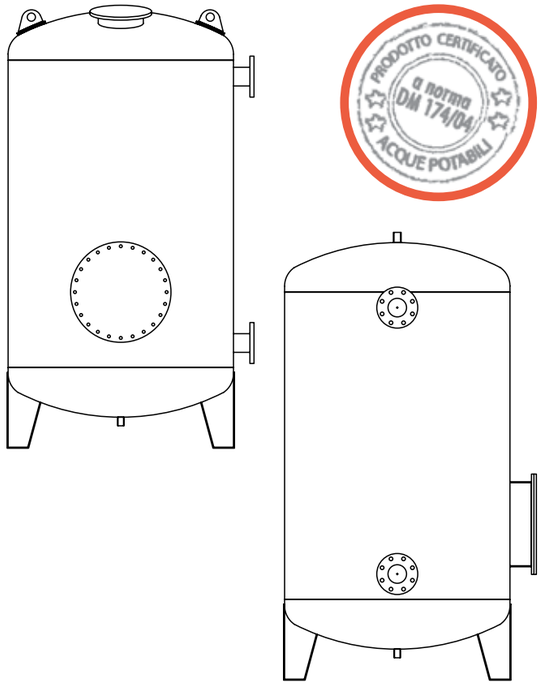

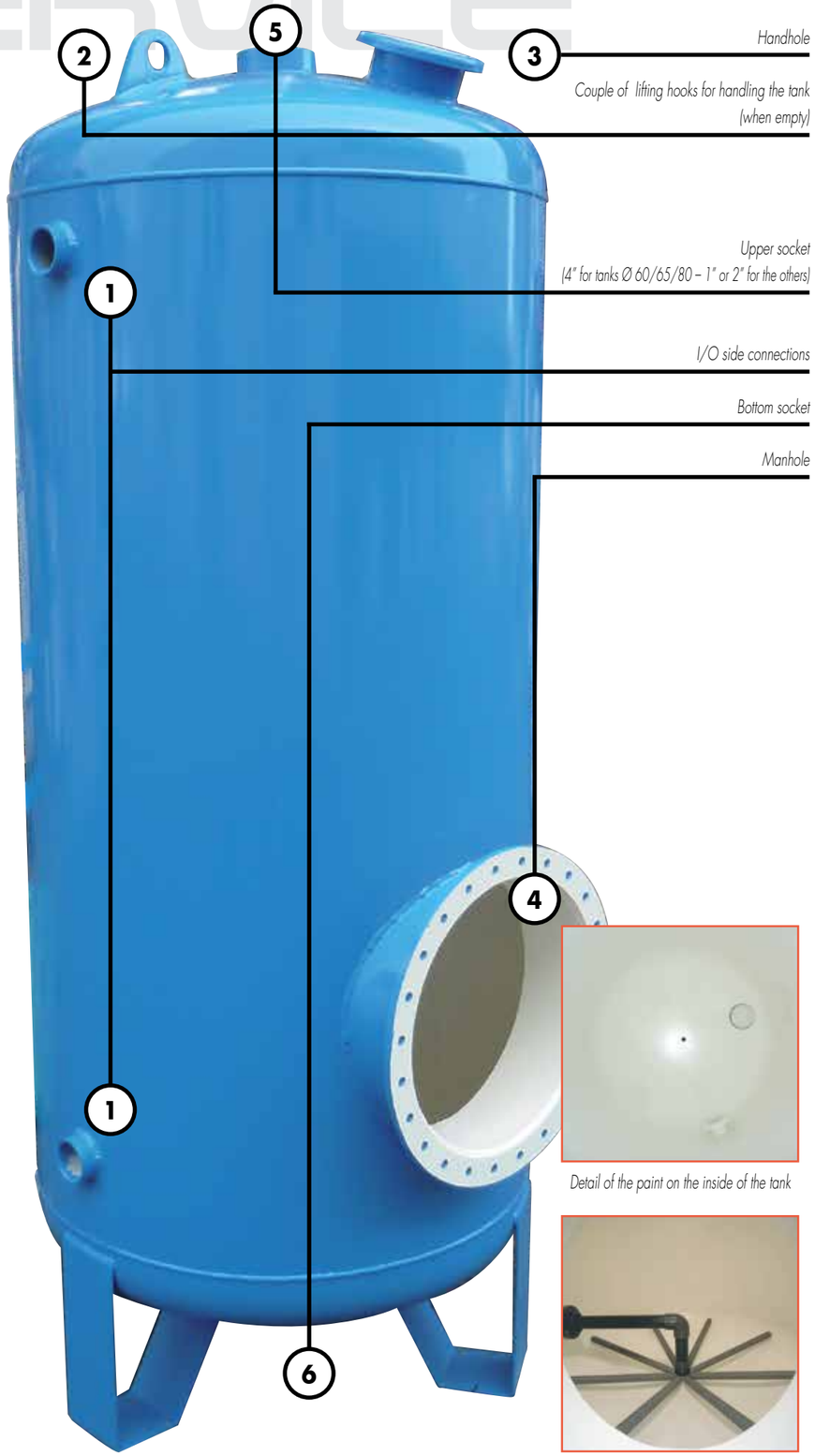

Detail of the paint on the inside of the tank

TECHNICAL DATA

Epoxy painted carbon steel tanks - arm collector distribution

Model	Ext. diam. (mm)	Cylinder heigh (mm)	Max height (mm)	I/O ext. conn.	I/O int. conn.	I/O distance connectors (mm)	Top socket	Bottom socket	Weight (kg)	Volume (l)
SV60-2	600	1500	1970	2"	2"	1300	4" UN	3/4"	94	470
SV65-2	650	1500	1980	2"	2"	1300	4" UN	3/4"	109	550
SV80-2	800	1500	2070	2"	2"	1300	4" UN	3/4"	136	880
SV95-DN80	950	1500	2105	DN80	3"	1300	1"	3/4"	216	1280
SV110-DN80	1100	1500	2185	DN80	3"	1300	1"	3/4"	256	1730
SV130-DN80	1300	1500	2280	DN80	3"	1300	1"	3/4"	399	2510
SV140-DN80	1400	1500	2325	DN80	3"	1300	1"	3/4"	442	2950
SV140-DN100	1400	1500	2325	DN100	DN100	1300	1"	3/4"	442	2950
SV150-DN80	1500	1500	2380	DN80	3"	1300	1"	3/4"	483	3430
SV150-DN100	1500	1500	2380	DN100	DN100	1300	1"	3/4"	483	3430
SV160-DN80	1600	1500	2525	DN80	3"	1300	2"	1" 1/2	829	3950
SV160-DN100	1600	1500	2525	DN100	DN100	1300	2"	1" 1/2	829	3950
SV160-DN125	1600	1500	2525	DN125	DN125	1300	2"	1" 1/2	829	3950
SV180-DN80	1800	1500	2665	DN80	3"	1300	2"	1" 1/2	944	5180
SV180-DN100	1800	1500	2665	DN100	DN100	1300	2"	1" 1/2	944	5180
SV180-DN125	1800	1500	2665	DN125	DN125	1300	2"	1" 1/2	944	5180
SV200-DN80	2000	1500	2785	DN80	3"	1300	2"	1" 1/2	1078	6560
SV200-DN100	2000	1500	2785	DN100	DN100	1300	2"	1" 1/2	1078	6560
SV200-DN125	2000	1500	2785	DN125	DN125	1300	2"	1" 1/2	1078	6560

Work temperature 2 - 50 °C

Max work pressure 5 bar.

VERSION WITHOUT DISTRIBUTION

Code	Euro
SV60-2	
SV65-2	
SV80-2	
SV95-DN80	
SV110-DN80	
SV130-DN80	
SV140-DN80	
SV140-DN100	
SV150-DN80	
SV150-DN100	
SV160-DN80	
SV160-DN100	
SV160-DN125	
SV180-DN80	
SV180-DN100	
SV180-DN125	
SV200-DN80	
SV200-DN100	
SV200-DN125	

VERSION WITH INTERNAL UPPER AND LOWER DISTRIBUTION WITH ARM COLLECTOR AND DRAIN VALVE

Code	Euro
SV60KIT-2	
SV65KIT-2	
SV80KIT-2	
SV95KIT-DN80	
SV110KIT-DN80	
SV130KIT-DN80	
SV140KIT-DN80	
SV140KIT-DN100	
SV150KIT-DN80	
SV150KIT-DN100	
SV160KIT-DN80	
SV160KIT-DN100	
SV160KIT-DN125	
SV180KIT-DN80	
SV180KIT-DN100	
SV180KIT-DN125	
SV200KIT-DN80	
SV200KIT-DN100	
SV200KIT-DN125	

TANK WITH NUZZLE PLATE

Carbon steel pressure tanks designed for water softeners and filters. Equipped with upper and lower socket; IN-OUT side connections threaded and/or flanged; upper lifting hooks; upper/medium and lower manholes n.3 of the appropriate size for inspection, filling and emptying of the filter material. Laser cut steel nozzle plate, 15 mm thickness, with 60 holes /m² (for nozzles).

Automatic welding procedure type MIG/MAG.

TECHNICAL DATA

CARBON STEEL TANKS WITH NOZZLE PLATE, 1500mm CYLINDER (price on request)

Code	Ext. diam. (mm)	Cylinder heigh (mm)	Max height (mm)	I/O ext. conn.	I/O distance connectors (mm)	Top socket	Bottom socket	Volume (l)	Weight (kg)
SV160P-DN80-1500	1600	1500	2800	DN80	1300	2"	1"1/2	4000	1150
SV160P-DN100-1500	1600	1500	2800	DN100	1300	2"	1"1/2	4000	1150
SV160P-DN125-1500	1600	1500	2800	DN125	1300	2"	1"1/2	4000	1150
SV180P-DN80-1500	1800	1500	3000	DN80	1300	2"	1"1/2	5200	1350
SV180P-DN100-1500	1800	1500	3000	DN100	1300	2"	1"1/2	5200	1350
SV180P-DN125-1500	1800	1500	3000	DN125	1300	2"	1"1/2	5200	1350
SV200P-DN80-1500	2000	1500	3100	DN80	1300	2"	1"1/2	6500	1550
SV200P-DN100-1500	2000	1500	3100	DN100	1300	2"	1"1/2	6500	1550
SV200P-DN125-1500	2000	1500	3100	DN125	1300	2"	1"1/2	6500	1550
SV220P-DN100-1500	2200	1500	3150	DN100	1300	2"	1"1/2	8100	2100
SV220P-DN125-1500	2200	1500	3150	DN125	1300	2"	1"1/2	8100	2100
SV220P-DN150-1500	2200	1500	3150	DN150	1300	2"	1"1/2	8100	2100
SV250P-DN100-1500	2500	1500	3200	DN100	1300	2"	1"1/2	10800	2500
SV250P-DN125-1500	2500	1500	3200	DN125	1300	2"	1"1/2	10800	2500
SV250P-DN150-1500	2500	1500	3200	DN150	1300	2"	1"1/2	10800	2500
SV300P-DN125-1500	3000	1500	3600	DN125	1300	2"	1"1/2	16500	4200
SV300P-DN150-1500	3000	1500	3600	DN150	1300	2"	1"1/2	16500	4200
SV300P-DN200-1500	3000	1500	3600	DN200	1300	2"	1"1/2	16500	4200

TECHNICAL DATA

CARBON STEEL TANKS WITH NOZZLE PLATE, 2000mm CYLINDER (price on request)

Code	Ext. diam. (mm)	Cylinder heigh (mm)	Max height (mm)	I/O ext. conn.	I/O distance connectors (mm)	Top socket	Bottom socket	Volume (l)	Weight (kg)
SV160P-DN80-2000	1600	2000	3300	DN80	1300	2"	1"1/2	5000	1300
SV160P-DN100-2000	1600	2000	3300	DN100	1300	2"	1"1/2	5000	1300
SV160P-DN125-2000	1600	2000	3300	DN125	1300	2"	1"1/2	5000	1300
SV180P-DN80-2000	1800	2000	3500	DN80	1300	2"	1"1/2	6500	1500
SV180P-DN100-2000	1800	2000	3500	DN100	1300	2"	1"1/2	6500	1500
SV180P-DN125-2000	1800	2000	3500	DN125	1300	2"	1"1/2	6500	1500
SV200P-DN80-2000	2000	2000	3600	DN80	1300	2"	1"1/2	8100	1750
SV200P-DN100-2000	2000	2000	3600	DN100	1300	2"	1"1/2	8100	1750
SV200P-DN125-2000	2000	2000	3600	DN125	1300	2"	1"1/2	8100	1750
SV220P-DN100-2000	2200	2000	3650	DN100	1300	2"	1"1/2	10000	2350
SV220P-DN125-2000	2200	2000	3650	DN125	1300	2"	1"1/2	10000	2350
SV220P-DN150-2000	2200	2000	3650	DN150	1300	2"	1"1/2	10000	2350
SV250P-DN100-2000	2500	2000	3700	DN100	1300	2"	1"1/2	13300	2750
SV250P-DN125-2000	2500	2000	3700	DN125	1300	2"	1"1/2	13300	2750
SV250P-DN150-2000	2500	2000	3700	DN150	1300	2"	1"1/2	13300	2750
SV300P-DN125-2000	3000	2000	4100	DN125	1300	2"	1"1/2	20000	4600
SV300P-DN150-2000	3000	2000	4100	DN150	1300	2"	1"1/2	20000	4600
SV300P-DN200-2000	3000	2000	4100	DN200	1300	2"	1"1/2	20000	4600

Corrosion protection by means of the following coating cycles:

internally:
blasting process grade SA 2 ½ - 3 and application of epoxy primer. Finish with a double layer of epoxy paint solvent-free, non-toxic, food-grade (total thickness: approx. 250 µ).

Paint certified for use with drinking water installations;

externally:
blasting process grade SA 2 ½ -3 and application of epoxy primer. Finish with a layer of enamel (total thickness: approx. 100 µ).

Max working pressure 5 bar (ambient temperature).

The tanks are supplied without polypropylene nozzles and top PVC distribution, these are to be ordered apart.

Detail of the paint on the inside of the tank

BRINE TANKS

Code	Description	Euro
T100	Brine tank 100 l – Ø 480 x 680 h (mm)	
T200	Brine tank 200 l – Ø 570 x 1070 h (mm)	
T300	Brine tank 300 l – Ø 700 x 1130 h (mm)	
T520	Brine tank 520 l – Ø 900 x 1160 h (mm)	
T850	Brine tank 850 l – Ø 1080 x 1080 h (mm)	
T1000	Brine tank 1000 l – Ø 1240 x 1080 h (mm)	
T1500	Brine tank 1500 l – Ø 1220 x 1340 h (mm)	

BRINE WELLS, SALT GRIDS

Code	Description	Euro
PZ10X41	BRINE WELL FOR CABINET 18" Ø 100 x 410 h (mm)	
PZ10X62	BRINE WELL FOR BRINE TANK 100 l, Ø 100 x 620 h (mm)	
PZ10X109	BRINE WELL FOR BRINE TANK AND CABINET 35" Ø 100 x 1090 h (mm)	
PZ20X100	BRINE WELL FOR BRINE TANK Ø 160 x 1000 h (mm)	
T100-G02390	SALT GRID FOR 100 l BRINE TANK	
TPZ10	BRINE WELL COVER Ø 100 (mm)	

EJECTORS

PVC turned ejectors for brine aspiration, complete with union connections.

Code	Description	Euro
EI1000	EJECTOR CON. 32 mm FLOW RATE 300 - 600 l/h	
EI2000	EJECTOR CON. 50 mm FLOW RATE 600 – 3000 l/h	

EI1000

EI2000

BRINE VALVES - AIR CHECK - FITTINGS

Code	Description	Euro
BV3/8-72	BRINE VALVE 3/8" - h 725 mm	
BV3/8-110	BRINE VALVE 3/8" - h 1100 mm	
VSBR1-100/05	BRINE VALVE SIATA 3/8"	
VF-KIT60067-03	SAFETY BRINE VALVE FLECK 3/8"	
VF-KIT27453	SAFETY BRINE VALVE FLECK 1/2"	
BV3/4	BRINE VALVE 3/4" tube not included	
VF500AC	AIR CHECK 3/8" with tube - h 925 mm	
VF-KIT18979	AIR CHECK 1/2" with tube - H 1500 mm	
TB3/8	PVC HOSE 3/8" - h 910 mm	
P6ABS	BRINE SUNCTION NOZZLE 3/8"	
TP1/2	FITTING "OVERFILL"	

TP 1/2

P6ABS

BV3/8-72 BV3/8-110 VF-KIT60067-03

BV3/4

VF500AC VF-KIT18979

TANK HEADS FOR MANUAL FILTERS

ABS head fitted for tanks with upper connection threaded 2 "½ and 4". Suitable for the construction of manual backwash filters.

IS101 with tank connection 2 "1/2, I/O connections 1", suitable for top and bottom nozzles and distributor tube Ø 27 mm.

IS105 with tank connection 4 ", I/O connections 1"1/2, suitable for top and bottom nozzles and distributor tube Ø 50 mm.

NB: It is necessary to order apart distributor tubes, under valve and bottom nozzles.

IS101

IS105

IS203

ADS50

Code	Description	Euro
IS101	ABS HEAD 2"1/2– I/O 1"	
To be ordered apart:		
IS203	UNDERVALVE NOZZLE FOR IS101	
TB27-1.5	DISTRIBUTOR TUBE 27 mm – 1.5 m	
D8-27	BOTTOM NOZZLE Ø 27 mm	

Code	Description	Euro
IS105	ABS HEAD 4" – I/O 1"1/2	
To be ordered apart:		
ADS50	UNDERVALVE NOZZLE FOR IS105	
TB50	DISTRIBUTOR TUBE 50 mm – 1.5 m	
D8-50	BOTTOM NOZZLE Ø 50 mm	

ACCESSORIES FOR PRESSURE TANKS

IS502

IS504

IS510

Code	Description	Euro
IS502	HUBCAP 4"UN	
IS504	REDUCING HUBCAP 4" UN/2"1/2 UN	
IS510	REDUCING HUBCAP 4" UN/1" BSP	
HI117053	DOUBLE EFFECT AIR RELIEF VALVE 1"	
HI117106	DOUBLE EFFECT AIR RELIEF VALVE 2"	

HI117106

HI117053

NOZZLES – DISTRIBUTOR TUBES

Code	Description	Euro
ADS27	UNDERVALVE NOZZLE FOR Ø 27 mm TUBE	
ADS32	HIGH FLOW UNDERVALVE NOZZLE FOR Ø 32 mm TUBE	
ADS50	UNDERVALVE NOZZLE FOR Ø 50 mm TUBE	
D8-27	BOTTOM DISTRIBUTOR FOR Ø 27 mm TUBE	
D8-32 HF	BOTTOM DISTRIBUTOR FOR Ø 32 mm TUBE	
D8-50	BOTTOM DISTRIBUTOR FOR Ø 50 mm TUBE	
TB27-1	DISTRIBUTOR TUBE Ø 27 mm – 1 m	
TB27-1,5	DISTRIBUTOR TUBE Ø 27 mm – 1.5 m	
TB32	DISTRIBUTOR TUBE Ø 32 mm – 2 m	
TB50	DISTRIBUTOR TUBE Ø 50 mm – 2 m	
UG-P7	PP NOZZLE 15/16", SLOT 0.25 mm L=50mm	
UG-NPA15-16	BACKNUT FOR NOZZLE	
UG-TS3	EXPANSION GUSSET FOR NOZZLE 15/16"	

ADS-27

D8-50

UG-P7

D8-27

UG-TS3

UG-NPA15-16

D8-32-HF

ADS-50

DISTRIBUTION SYSTEMS FOR TANKS W/SIDE CONNECTIONS TOP

Hubs in ABS, for Ø 50 mm and Ø 90 mm riser tube, laterals in PP (6 or 8 laterals depending on model), slot 0.25 mm, lateral diameter 53 mm. For softening and filtration plants in tanks with side I/O connections. Maximum temperature of 50° C.

DIMENSIONS

Code	Dimensions (mm)						
	Lateral	Top con.	A	C	D	E	Slot
IS306	136	50	370	53	60	160	0,25
IS307	182	50	450	53	60	160	0,25
IS403	318	90	750	53	100	280	0,25
IS404	380	90	870	53	100	280	0,25
IS405	445	90	980	53	100	280	0,25
IS407	640	90	1345	53	100	280	0,25

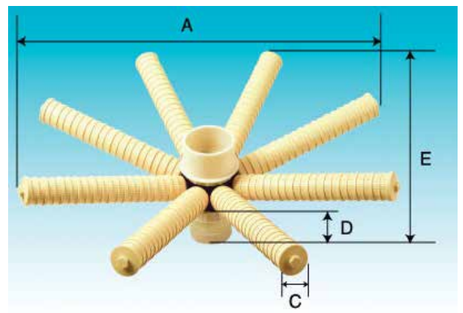

IS405

Code	Description	Euro
IS306	Distribution system 6 laterals. For 18-20" tanks (500mm)	
IS307	Distribution system 6 laterals. For 21-24" tanks (600mm)	
IS403	Distribution system 8 laterals. For 36" tanks (900mm)	
IS404	Distribution system 8 laterals. For 40" tanks (1000mm)	
IS405	Distribution system 8 laterals. For 48-55" tanks (1200-1400mm)	
IS407	Distribution system 8 laterals. For 65-80" tanks (1600-2000mm)	

DISTRIBUTION SYSTEMS FOR TANKS W/ 4"TOP-4" BOTTOM

Distribution systems for fibreglass tanks with double connections 4" TOP + BOTTOM. Equipped with external elbow diameter 50 mm and 6 laterals. For softening and filtration plants. Maximum temperature of 50 °C. Slot dimensions equal to 0.25 mm.

IS311

DIMENSIONS

Code	Dimensions (mm)				Connection 4"
	A	B	C	D	
IS311	190	320	88	63	4" UN

Codice	Description	Euro
IS311	Top/bottom distrib. syst.. for tanks up to 30"	
IS319	Bottom distrib. syst. 6 laterals. For 18-20" tanks	
IS320	Bottom distrib. syst. 6 laterals. For 21-24" tanks	
IS321	Bottom distrib. syst. 6 laterals. For 30" tanks	
IS322	Bottom distrib. syst. 6 laterals. For 36-40" tanks	

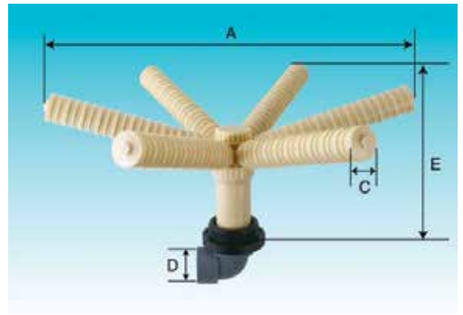

IS320

DIMENSIONS

Code	Dimensions (mm)						Connection 4"
	Lateral	A	C	D	E	Slot	
IS319	136	370	53	63	260	0,25	4" UN
IS320	182	450	53	63	260	0,25	4" UN
IS321	260	620	53	63	260	0,25	4" UN
IS322	330	710	53	63	260	0,25	4" UN

CABINET NAUTILUS

Equipped with tank and brine well.

Code	Dimensions l x w x h (mm)	Tank	Euro
NAUTI-7X13	430x225x355	7X13" HST	

CABINET DIAMANTE

Equipped with tank HST and brine well.

Code	Dimensions l x w x h (mm)	Tank	Euro
DIA8X17	605x350x670	8" X 17" HST	
DIA8X35	605x350x1120	8" X 35" HST	
DIA9X35	605x350x1120	9" X 35" HST	

CABINET SERIES TOP CAB

Equipped with Structural tank, base, grate and brine well.

Code	Dimensions l x w x h (mm)	Tank	Euro
TOP-CAB8X18	334x486x721	8"x18"	
TOP-CAB8X35	334x486x1176	8"x35"	
TOP-CAB9X35	334x486x1176	9"x35"	

AUTOTROL LOGIX 255

Construction Material:	Noryl
I/O connections:	1" Noryl or brass with mixer
Regeneration cycles:	8 cycles to program according to softener size
Programmer:	740 Electronic timer or 760 Electronic volumetric timer
Flow (Δp 1bar):	3,4 m^3/h
Backwash (Δp 1bar):	1.36 m^3/h
Recommended for:	Softeners up 10" tank

Code	Description	Euro
VA255-740	VALVE LOGIX TIME CLOCK 255-740	
BOX-VA255-740	Box includes 4 valves Logix 255-740	
VA255-760	VALVE LOGIX VOLUMETRIC 255-760	
BOX-VA255-760	Box includes 4 valves Logix 255-760	
Price includes:	COVER TRANSFORMER AIR CHECK	
Needs to order separately: Or:	ADS 27 UNDERVALVE NOZZLE D8-27 BOTTOM NOZZLE TB27 DISTRIBUTOR TUBE VA-PLAST1 NORYL I/O CONNECTIONS KIT VA-BRASS1 NORYL I/O CONNECTIONS KIT	
FOR AUXILIARY MICROSWITCH ORDER:	VA-KIT1239754 MICROSWITCH W/BRACKET	

AUTOTROL PERFORMA LOGIX 268

Construction Material:	Noryl
I/O connections:	1" Noryl/brass
Regeneration cycles:	8 cycles to program according to softener size
Programmer:	740 Electronic timer or 760 Electronic volumetric timer
Flow (Δp 1bar):	5,7 m^3/h
Backwash (Δp 1bar):	7.3 m^3/h
Recommended for:	Softeners up 14" tank

Code	Description	Euro
VA268-740	VALVE LOGIX TIME CLOCK 268/740	
BOX-VA268-740	Box includes 4 valves Logix 268-740	
VA268-760	VALVE LOGIX VOLUMETRIC 268/760	
BOX-VA268-760	Box includes 4 valves Logix 268-760	
Price includes:	COVER TRANSFORMER	
Needs to order separately:	ADS 27 UNDERVALVE NOZZLE D8-27 BOTTOM NOZZLE TB27 DISTRIBUTOR TUBE VA-JP7060 3/8" ELBOW FOR 3/8" PIPE VF500AC 3/8" AIR CHECK VA-KIT1001605 I/O CONNECTIONS KIT	
FOR AUXILIARY MICROSWITCH ORDER:	VA-KIT1239754 MICROSWITCH W/BRACKET	

AUTOTROL PERFORMA LOGIX 263

Construction Material:	Noryl
I/O connections:	1" Noryl/brass
Regeneration cycles:	3 cycles to program according to filter size
Programmer:	740 Electronic timer
Flow (Δp 1bar):	5,7 m^3/h
Backwash (Δp 1bar):	7.3 m^3/h
Recommended for:	Filters up 14" tank

Code	Description	Euro
VA 263-740	VALVE LOGIX TIME CLOCK 263/740	
BOX-VA263-740	Box includes 4 valves Logix 263-760	
Price includes:	COVER TRANSFORMER	
Needs to order separately:	ADS 27 UNDERVALVE NOZZLE D8-27 BOTTOM NOZZLE TB27 DISTRIBUTOR TUBE VA-KIT1001605 I/O CONNECTIONS KIT	
FOR AUXILIARY MICROSWITCH ORDER:	VA-KIT1239754 MICROSWITCH W/BRACKET	

AUTOTROL ACCESSORIES

Code	Description	Euro
VA-PLAST1	I/O PLASTIC CONNECTION 1" M FOR 255 LOGIX W/O'RINGS	
VA-BRASS1	I/O BRASS CONNECTION 1" F W/MIX FOR 255 LOGIX W/O'RINGS	
VA-KIT1001605	I/O CONNECTIONS KIT FOR LOGIX 268/263	
VA-JP7040	1/4" ELBOW FOR 3/8" PIPE	
VA-JP7060	3/8" ELBOW FOR 3/8" PIPE	
VA-BP256	BY PASS FOR 255 AND LOGIX 255 (ORDER W/ VA-KIT1001605)	
VA-BP268	BY PASS FOR 268/263 (ORDER W/ VA-KIT1001605)	

VA-PLAST1

VA-JP7040

VA-BRASS1

VA-KIT1001605

VA-BP256

VA-BP268

AUTOTROL SPARE PARTS

Code	Description	Euro
VA-TIMER460TC	TIMER 460TC CRONO	
VA-TIMER740	TIMER LOGIX 740 CRONO	
VA-TIMER760	TIMER LOGIX 760 VOLUME	
VA-KIT1040459	O'RING GROUP PIPING BOSS FOR 255 AND LOGIX 255	
VA-KIT1239760	MIXING SCREW FOR LOGIX 255/268	
VA-KIT3019221	ENGINE KIT + OPITICAL SENSOR WIRE LOGIX 255/263/268	
VA-KIT1235373	OPTICAL SENSOR MODULE FOR LOGIX 255/268/263	
VA-KIT1001404	KIT O'RINGS 255 AND LOGIX 255	
VA-KIT1235446	TURBINE CABLE FOR LOGIX 255/268/263	
VA-KIT1010154	TANK O'RING FOR LOGIX 255/268/263	
VA-KIT1239754	MICROSWITCH W/BRAKET FOR LOGIX 255/268/263	
VA-KIT1236246	COVER LOGIX 255/268/263	
VA-KIT1235340	TOP PLATE FOR LOGIX 255	
VA-KIT1235338	TOP PLATE FOR LOGIX 268/263	
VA-KIT1235341	SPRING ONE PIECE FOR LOGIX 255	
VA-KIT1235339	SPRING ONE PIECE FOR LOGIX 268/263	
VA-KIT1000250	VALVE DISCS FOR LOGIX 255	
VA-KIT1041174	VALVE DISCS FOR LOGIX 263/268	
VA-KIT1032350	KIT METER ADAPTER FOR LOGIX 255	
VA-KIT1033444	KIT METER ADAPTER FOR LOGIX 268	
VA-KIT1235353	CAM STD FOR LOGIX 255	
VA-KIT1235352	CAM STD FOR LOGIX 268/263	
VA-KIT1030502	BALL FLOW CONTROL	
VA-KIT1031391	TIMER LOCKING PIN	
VA-KIT1032416	AIR CHECK KIT 3/8" M	
VA-KIT500	TRANSFORMER FOR AUTOTROL VALVE 12V-AC	
VA-KIT1032970	WHITE INJECTOR A FOR 255	
VA-KIT1032971	BLUE INJECTOR B FOR 255	
VA-KIT1032972	RED INJJECTOR C FOR 255	
VA-KIT1034261	BRINE REFILL 1-10 LBS SALT FOR 255 AND LOGIX 255	
VA-KIT1034263	REFILL 3-19 LBS SALT FOR 255 AND LOGIX 255	
VA-KIT1035732	G INJECTOR TAN (8" TANKS) FOR LOGIX 255/268	
VA-KIT1035733	H INJECTOR PURPLE (9" TANKS) FOR LOGIX 255/268	
VA-KIT1035734	J INJECTOR BLU (10" TANKS) FOR LOGIX 255/268	
VA-KIT1035735	K INJECTOR PINK (12" TANKS) FOR LOGIX 255/268	
VA-KIT1035736	L INJECTOR ORANGE (13" AND 14" TANKS) FOR LOGIX 255/268	
VA-KIT1033270	KIT MICROSWITCH 255/440 AND 460 (INCLUDE SHAFT AND CAM)	
VA-KIT1000062	COVER FOR 255/440 NEW STYLE	
VA-KIT1000210	BACKWASH 8 FOR 255 AND LOGIX 255/268/263	
VA-KIT1000211	BACKWASH 9 FOR 255 AND LOGIX 255/268/263	
VA-KIT1000212	BACKWASH 10 FOR 255 AND LOGIX 255/268/263	
VA-KIT1000213	BACKWASH 12 FOR 255 AND LOGIX 255/268/263	
VA-KIT1000214	BACKWASH 13 FOR 255 AND LOGIX 255/268/263	
VA-KIT1000215	BACKWASH 14 FOR 255 AND LOGIX 255/268/263	

VA-TIMER460TC

VA-TIMER760

VA-KIT1035736

VA-KIT500

VA-KIT1032416

BACKWASH

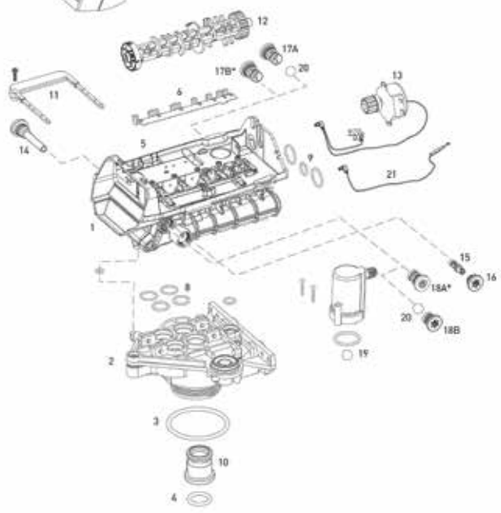

All valves comply with the requirements of the European Directives 89/336/CEE and/or 73/23/CEE. The number 1600 indicates the injector for tanks with a diameter less than 16 "(3/8" hose connection). The number 1700 indicates the injector for tanks from 16 "to 36" (1/2" hose connection).

FLECK 2750

Construction Material:	Bronze
I/O connections:	1"
Regeneration cycles:	(5) adjustable according to system size
Regeneration type:	Downflow
Flow (Inlet 3.5 bar, Δp 1 bar):	5.9 m3/h (valve) - 5 m^3/h (system)
Peak Flow (Inlet 3.5 bar, Δp 1,8 bar):	7.5 m3/h (valve) – 6.8 m^3/h (system)
Backwash (Inlet 3.5 bar, Δp 1 bar):	5.6 m3/h (valve) - 5 m^3/h (system)
Recommended for:	Softeners up 24" tank – filters up 21" tank

FLECK®

Code	Description	Euro
VF-2750-1600	VALVE 2750/1600 TIME CLOCK	
VF-2750-1600MET40MC	VALVE 2750/1600 VOLUMETRIC 40 m^3/h	
Price includes:	DRAIN HOSE BARB ½"	
Needs to order separately:	ADS27 UNDERVALVE NOZZLE D8-27 BOTTOM NOZZLE TB27 DISTRIBUTOR TUBE Ø 27mm – 1.5 m VF500AC 3/8" AIR CHECK	
FOR AUXILIARY MICROSWITCH ORDER:	N. 1 VF-KIT-BU28673(FILT.) OR VF-KIT-BU28672 (SOFT.) + VF-KIT28389 (CAM)	

FLECK 2850 SXT

Construction Material:	Bronze
I/O connections:	1" 1/2
Regeneration cycles:	5 adjustable according to system size
Regeneration type:	Downflow
Flow (Inlet 3.5 bar, Δp 1bar):	11.6 m3/h (valve) - 10 m^3/h (system)
Peak Flow (Inlet 3.5 bar, Δp 1,8bar):	15 m3/h (valve) – 12.5 m^3/h (system)
Backwash (Inlet 3.5 bar, Δp 1bar):	11.1 m3/h (valve) – 5.7 m^3/h (system)
Recommended for:	softeners up to 24" tank and filters up to 24" tank

Code	Description	Euro
VF2850-1710SXT	VALVE 2850/1710 ELECTRONIC SXT CRONO	
VF2850-1710-MET-SXT	VALVE 2850/1710 ELECTRONIC SXT METER	
VF2850-FILTER-SXT	VALVE 2850 ELECTRONIC SXT CRONO	
Price includes:	TOP 2"	
Needs to order separately:	D8-50 BOTTOM NOZZLE TB50 DISTRIBUTOR TUBE Ø 50mm - 2 m VF-KIT18979 AIR CHECK 1/2" - H 1500 mm (SOFTENERS ONLY)	
FOR AUXILIARY MICROSWITCH ORDER:	N. 1 VF-KIT-BU28672 (SOFT.) OR VF-KIT-BU28673 (FILT.) + VF-KIT28389 (CAM)	

FLECK 2910 SXT

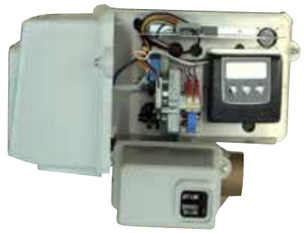

Construction Material:	Bronze
I/O connections:	2"
Regeneration cycles:	(5) adjustable according to system size
Regeneration type:	Downflow
Flow (Inlet 3.5 bar, Δp 1 bar):	24 m^3/h (valve) - 19 m^3/h (system)
Peak Flow (Inlet 3.5 bar, Δp 1,8 bar):	31 m^3/h (valve) – 23 m^3/h (system)
Backwash (Inlet 3.5 bar, Δp 1,8 bar):	5.6 m^3/h (valve) – 5.0 m^3/h (system)
Recommended for:	Softeners up to 30" tank, filter up to 21", iron removal up to 16" tanks

Code	Description	Euro
VF2910-1710-SXT	VALVE 2910/1710 ELECTRONIC SXT CRONO	
VF2910-1710-MET-SXT	VALVE 2910/1710 ELECTRONIC SXT METER	
Price include:	TOP 2"	
Need to order separately:	D8-50 BOTTOM NOZZLE FOR PIPE Ø 50 mm TB50 DISTRIBUTOR TUBE Ø 50 mm - 2 m VF-KIT18979 AIR CHECK 1/2" - H 1500 mm	
FOR AUXILIARY MICROSWITCH ORDER:	VF-KIT-BU28674	

FLECK 5600

Construction Material:	Noryl
I/O connections:	1"
Regeneration cycles:	Adjustable only brine cycle
Regeneration type:	Downflow
Flow (Inlet 3.5 bar, Δp 1bar):	4.5 m^3/h (valve) - 2.7 m^3/h (system)
Peak Flow (Inlet 3.5 bar, Δp 1,8bar):	5.9 m^3/h (valve) - 3.8 m^3/h (system)
Backwash (Inlet 3.5 bar, Δp 1,8bar):	1.6 m^3/h (valve) - 1.1 m^3/h (system)
Recommended for:	Softeners up to 12" tank - filters up to 10" tank

Code	Description	Euro
VF5600-1600	VALVE 5600/1600 CRONO	
BOX-VF5600-1600	Box includes 6 valves 5600 CRONO	
VF5600-1600MET8MC	VALVE 5600/1600 METER 8 MC	
VF5600-1600MET40MC	VALVE 5600/1600 METER 40 MC	
Price include:	DRAIN HOSE BARB PROPORTIONAL MIXING SERVICE&REGENERATION LIGHTS	
Need to order separately:	ADS27 UNDERVALVE NOZZLE D8-27 BOTTOM NOZZLE TB27 DISTRIBUTOR TUBE Ø 27mm - 1.5 m VF500AC 3/8" AIR CHECK VF-KIT18706 PLASTIC YOKE - VF-KIT13398 BRASS YOKE	
FOR AUXILIARY MICROSWITCH ORDER:	VF-KIT-BU28671	

FLECK 5600 SXT

Construction Material:	Noryl
I/O connections:	1"
Regeneration cycles:	(7) adjustable up to 99' cycle
Regeneration type:	Downflow or Upflow
Flow (Inlet 3.5 bar, Δp 1 bar):	4.5 m^3/h (valve) - 2.7 m^3/h (system)
Peak Flow (Inlet 3.5 bar, Δp 1,8 bar):	5.9 m^3/h (valve) - 3.8 m^3/h (system)
Backwash (Inlet 3.5 bar, Δp 1 bar):	1.6 m^3/h (valve) - 1.1 m^3/h (system)
Recommended for:	Softeners up to 12" tank - filters up to 10" tank

FLECK®

PROMO

Code	Description	Euro
PROMO5600SXT-MET	5600 SXT VOL.DF. W/BY PASS INOX+V.DOUBLE SECURE + INT.DISTR.	
VF5600SXT-DF	VALVE 5600/1600 ELECTRONIC SXT CRONO DOWN FLOW	
BOX-VF5600SXT-DF	Box includes 6 valves 5600 SXT CRONO DF	
VF5600SXT-MET-DF	VALVE 5600/1600 ELECTRONIC SXT METER DOWN FLOW	
BOX-VF5600SXT-MET-DF	Box includes 6 valves 5600 SXT METER DF	
VF5600SXT-FILTER	VALVE 5600 ELECTRONIC SXT FILTER	
BOX-VF5600SXT-FILTER	Box includes 6 valves 5600 ELETTRONIC SXT FILTER	
VF5600SXT-UF	VALVE 5600/1600 ELECTRONIC SXT CRONO UP FLOW	
VF5600SXT-MET-UF	VALVE 5600/1600 ELECTRONIC SXT METER UP FLOW	
Price includes:	DRAIN HOSE BARB PROPORTIONAL MIXING ELECTRONIC BOARD SXT W/LCD DISPLAY	
Needs to order separately:	ADS27 UNDERVALVE NOZZLE D8-27 BOTTOM NOZZLE TB27 DISTRIBUTOR TUBE Ø 27mm - 1.5 m VF500AC 3/8" AIR CHECK (SOFT. VALVE ONLY) VF-KIT18706 PLASTIC YOKE - VF-KIT13398 BRASS YOKE	
FOR AUXILIARY MICROSWITCH ORDER:	VF-KITBU28670	

FLECK 7700 SXT HIGH FLOW

Construction Material:	Noryl
I/O connections:	1" 1/4
Regeneration cycles:	Adjustable max 199' cycle
Regeneration type:	Downflow
Flow (Inlet 3.5 bar, Δp 1 bar):	8.1 m^3/h
Peak Flow (Inlet 3.5 bar, Δp 1,8 bar):	10.4 m^3/h
Backwash (Inlet 3.5 bar, Δp 1,8 bar):	3.6 m^3/h (softener) - 7.1 m^3/h (filter)
Recommended for:	Softeners and filters up to 24" tank

Code	Description	Euro
VF7700SXT-HF	VALVE 7700/1600 HIGH FLOW ELECTRONIC SXT CRONO	
VF7700SXT-MET-HF	VALVE 7700/1600 HIGH FLOW ELECTRONIC SXT METER	
VF7700SXT-FILTER	VALVE 7700/1600 ELECTRONIC SXT FILTER	
Price includes:	DRAIN HOSE BARB ELECTRONIC BOARD SXT W/LCD DISPLAY 3/8" BRINE FITTING AUXILIARY MICROSWITCH (FILTER VALVE ONLY)	
Needs to order separately:	ADS32 UNDERVALVE NOZZLE D8-32 BOTTOM NOZZLE TB32 DISTRIBUTOR TUBE Ø 32mm – 2 m VF500AC 3/8" AIR CHECK (SOFT. VALVE ONLY) VF-KIT28355 1"1/4 MALE PLASTIC CONNECTOR (2 PCS)	
FOR AUXILIARY MICROSWITCH ORDER:	VF-28343	

FLECK 9100 SXT

Construction Material:	Noryl
Programmer:	SXT electronic
I/O connections :	1"
Regeneration cycles:	(6) adjustable up to 99' cycle
Regeneration type:	Downflow
Meter:	Electronic, turbine
Flow (Inlet 3.5 bar, Δp 1 bar):	4.6 m^3/h
Peak Flow (Inlet 3.5 bar, Δp 1,8 bar):	5.8 m^3/h
Backwash (Inlet 3.5 bar, Δp 1,8 bar):	1.8 m^3/h
Recommended for:	Softeners up to 16" tank

Code	Description	Euro
VF-9100SXT-MET	VALVE 9100/1600 DUPLEX SXT 3/4 METER	
Price include:	DRAIN HOSE BARB 2° ADAPTER PVC CONNECTING TUBES 16"	
Need to order separately:	ADS27 UNDERVALVE NOZZLE Ø 27mm (2 PCS) D8-27 BOTTOM NOZZLE Ø 27mm (2 PCS) TB27 DISTRIBUTOR TUBE Ø 27mm – 1.5 m (2 PCS) VF500AC 3/8" AIR CHECK (1 PC) VF-KIT18706 PLASTIC YOKE (1 PC) (VF-KIT13398 BRASS YOKE) (1 PC)	
FOR AUXILIARY MICROSWITCH ORDER:	VF-KIT28359	

FLECK 9500 SXT

Construction Material:	Bronze
Programmer:	SXT electronic
I/O connections:	1" 1/2
Regeneration cycles:	(5) adjustable up to 99' cycle
Regeneration type:	Downflow
Flow (Inlet 3.5 bar, Δp 1 bar):	8.4 m^3/h (valve) – 6.8 m^3/h (system)
Peak Flow (Inlet 3.5 bar, Δp 1,8 bar):	11.2 m^3/h (valve) – 9.2 m^3/h (system)
Backwash (Inlet 3.5 bar, Δp 1,8 bar):	3.3 m^3/h (valve)
Recommended for:	Softeners up to 24" tank, filters up to 16", NOT SUITABLE for iron

Code	Description	Euro
VF-9500SXT-MET	VALVE 9500/1700 DUPLEX SXT PLASTIC METER	
VF-KIT28137	KIT COPPER TUBES 2° TANK ADAPTER 24"	
Price include:	TOPS 2" (2 PCS) 2°TANK ADAPTER	
Need to order separately:	D8-50 BOTTOM NOZZLE Ø 50 mm (2 PCS) TB50 DISTRIBUTOR TUBE Ø 50mm – 2 m (2 PCS) VF-KIT18979 AIR CHECK 1/2" - H 1500 mm (1 PC) VF-KIT28137 KIT COPPER TUBES	
FOR AUXILIARY MICROSWITCH ORDER:	VF-KIT28359	

FLECK ACCESSORIES

Code	Description	Euro
VF-KIT13398	YOKE 1" BRASS FOR 5600/9100	
VF-KIT18706	YOKE 1" PLASTIC FOR 5600/9100	
VF-KIT28502	BY PASS 1" STAINLESS STEEL FOR 5600/9100	
VF-KIT26054	BY PASS 1" PLASTIC FOR 5600/9100	
VF-KIT40565-11	1 ¼" CONNECTOR, PLASTIC FOR 7700)	
VF-KIT40569-01	BY PASS PLASTIC FOR 7700 W/CLIPS	
VF-KIT28343	KIT AUXILIARY MICROSWITCH V 7700	
VF-KIT28359	KIT AUXILIARY MICROSWITCH V 9000/9100/9500	
VF-KIT-BU28670	KIT AUXILIARY MICROSWITCH V 5600SXT-6600-6700	
VF-KIT-BU28671	KIT MICROSWITCH 4600-5600	
VF-KIT-BU28672	KIT MICROSWITCH 2510-2750-2850	
VF-KIT-BU28673	KIT MICROSWITCH 2510-2750-2850 FILTER	
VF-KIT-BU28674	KIT MICROSWITCH 3900-2910	

VF-KIT13398

VF-KIT18706

VF-KIT26054

VF-KIT40569-01

VF-KIT40565-11

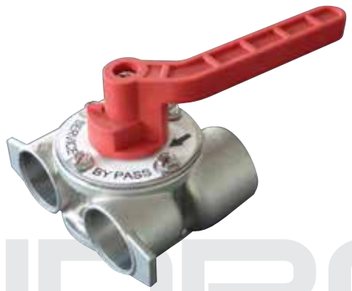

VF-KIT-28502

SIATA 132

SIATA

Construction Material:	ABS + fiberglass
I/O connections:	1" F Nylon
Connection type:	TOP, 2"1/2 UN
Timers:	SFE STANDARD
Working pressure:	1.5 – 6 bar
Flow (Δp 1 bar):	7 m³/h
Backwash (Δp 1 bar):	3 m³/h
Recommended for:	Softeners up to 200 l resins

PROMO

Code	Description	Euro
PROMO-132T+SFE	132T+SFE+BY PASS+FLOAT VALVE+ INT.DISP.	
VS-132A-05	VALVE 132 SOFTENING CHRONO	
BOX-VS132A-05	Box includes 4 Siata 132A 05 Chrono	
VS-132T-05	VALVE 132 SOFTENING VOLUME W/TURBINE	
BOX-VS132T-05	Box includes 4 Siata 132T 05 Volume	
VS-132F-05	VALVE 132 FILTER	
BOX-VS132F-05	Box includes 4 Siata 132T 05 Filter	
VS-132E-05-05	VALVE 132 SOFTENING DUPLEX	
VS-132E-T05-05	VALVE 132 SOFTENING DUPLEX W/TURBINE	
VS-132D-04-05	VALVE 132 DEMIN. AN. 4 CONN.	
VS-132D-05-05	VALVE 132 DEMIN. CAT. 5 CONN.	
VS-BP-DN1-06	DIRECT BY PASS	
VS-BP-DPN1-06	DIRECT BY PASS W/SAMPLE TAPS	
Prices include:	UNDERVALVE NOZZLE	
	BOTTOM NOZZLE	
Need to order separately:	STANDARD TIMER	
	TB32 DISTRIBUTOR TUBE	
	VS-2265-B-05 KIT FITTING 1" FEMALE THREADED (ORD. 2 PCS)	
Or:	VS-2265-H-05 KIT FITTING 1" ½ EXT > 1" INT THREADED (ORD. 2 PCS)	

SIATA 230

Construction Material:	ABS + Fiberglass
I/O connections:	2" M
Connection type:	TOP, 4" UN
Timers:	SFE Standard
Working pressure:	1.5 – 6 bar
Flow (Δp 1 bar):	10 m3/h
Backwash (Δp 1 bar):	4 m3/h
Recommended for:	Softeners up to 300 l resins, filters up to 21"

Code	Description	Euro
VS-230A-05	VALVE 230 SOFTENING CHRONO	
VS-230T-05	VALVE 230 SOFTENING W/TURBINE	
VS-230F-05	VALVE 230 FILTER	
VS-230E-05	VALVE 230 SOFT. DUPLEX	
VS-230E-T05-05	VALVE 230 SOFT. DUPLEX W/TURBINE	
VS-230D-05-05	VALVE 230 DEMIN. CAT. AND AN. 5 CONN.	
Prices include:	UNDERVALVE NOZZLE	
	BOTTOM NOZZLE	
Need to order separately:	TSTANDARD TIMER	
	TB50 DISTRIBUTOR TUBE	
	VS-494-B-05 KIT FITTING PVC 1" ¼ F PIPE SIDE (ORD. 2 PCS)	
Or:	VS-494-C-05 KIT FITTING PVC D 40mm F TO BE GLUED (ORD. 2 PCS)	
Or:	VS-494-F-05 KIT FITTING BRASS 1" ½ M (ORD. 2 PCS)	

SIATA 240

Construction Material:	ABS + Fibreglass
I/O connections:	1" F or 1" ½ M – DIA.40 solvent cement tank side
Connection type:	Side mount
Timers:	SFE, W/2 external pilots
Working pressure:	1.5 – 6 bar
Flow (Δp 1 bar):	10 m^3/h
Backwash (Δp 1 bar):	4 m^3/h
Recommended for:	Softeners up to 300 l resins

SIATA

Code	Description	Euro
VS-240A-05-05	VALVE 240 SOFTENING CHRONO	
VS-240T-05-05	VALVE 240 SOFTENING VOLUME W/TURBINE	
VS-240F-05-05	VALVE 240 FILTER	
VS-240D-04-05	VALVE 240 DEMIN. AN. 4 CONN.	
VS-240D-05-05	VALVE 240 DEMIN. CAT. 5 CONN.	
Need to order separately:	TIMER W/2 EXTERNAL PILOTS	
	VS-2265-B-05 KIT FITTING 1" FEMALE THREADED (ORD. 2 PCS)	
Or:	VS-2265-H-05 KIT FITTING SOCKET 1" ½ EXT > 1" INT THREADED (ORD. 2 PCS)	
	VS-2265-C-05 KIT FITTING PVC 1" ¼ FEMALE THREADED (ORD. 2 PCS)	

DLCF not included

SIATA 250

Construction Material:	ABS + Fibreglass
I/O connections:	1"1/2" – 2"
Connection type:	Top, 4" UN
Timers:	SFE W/2 external pilots
Working pressure:	1.5 – 6 bar
Flow (Δp 1 bar):	21 m^3/h
Backwash (Δp 1 bar):	12 m^3/h
Recommended for:	Softeners up to 500 l resins

Code	Description	Euro
VS-250A-BP-05	VALVE 250 SOFTENING BY PASS IN REG.	
VS-250A-NBP-05	VALVE 250 SOFTENING NO BY PASS IN REG.	
VS-250D-NBP-05	VALVE 250 DEMIN. CAT. AND AN. 5 CONN. NO BY PASS IN REG.	
Price include:	UNDERVALVE NOZZLE	
	BOTTOM NOZZLE	
Need to order separately:	TIMER SFE W/2 EXTERNAL PILOTS	
	TB50 DISTRIBUTOR TUBE	
	VS-494-A-05 KIT FITTING D.50 mm TO BE GLUED (ORD. 2 PCS)	
Or:	VS-494-G-05 KIT FITTING BRASS 2" MALE (ORD. 2 PCS)	
Or:	VS-494-H-05 KIT FITTING PVC 1" ½ FEMALE (ORD. 2 PCS)	
Or:	VS-494-P-05 KIT FITTING BRASS 1" ½ MALE (ORD. 2 PCS)	

DLCF not included

SIATA 260

Construction Material:	ABS + Fibreglass
I/O connections:	1" ½ - 2"¼ Tank side
Connection type:	Side mount
Timers:	SFE W/2 External pilots
Working pressure:	1.5 – 6 bar
Flow (Δp 1 bar):	21 m^3/h
Backwash (Δp 1 bar):	12 m^3/h
Recommended for:	Softeners up to 500 l resins

SIATA

Code	Description	Euro
VS-260A-BP-05	VALVE 260 SOFTENING BY PASS	
VS-260D-BP-05	VALVE 260 DEMIN. AN./CAT. BY PASS	
VS-260D-NBP-05	VALVE 260 DEMIN. AN./CAT. NO BY PASS	
Need to order separately:	TIMER W/2 EXTERNAL PILOTS	
	VS-494-A-05 KIT FITTING PVC D 50 mm TO BE GLUED (ORD. 4 PCS)	
Or:	VS-494-G-05 KIT FITTING PVC 2" MALE	
Or:	VS-494-H-05 KIT FITTING PVC 1" ½ FEMALE	
Or:	VS-494-P-05 KIT FITTING BRASS 1" ½ MALE	

DLCF not included

SIATA 360

Construction Material:	ABS + Fibreglass
I/O connections:	2" – 3" Flanged tank side
Connection type:	Side mount
Timers:	SFE W/2 External pilots
Working pressure:	1.5 – 6 bar
Flow (Δp 1 bar):	35-45 m^3/h
Backwash (Δp 1 bar):	12 m^3/h
Recommended for:	Softeners up to 1500 l resins (Model HIGH FLOW)

Code	Description	Euro
VS-360BKSMA-G	VALVE 360 SOFTENING HIGH FLOW	
VS-360BKSMF-F	VALVE 360 FILTER HIGH FLOW	
VS-360BKSMDA-N	VALVE 360 DEMIN. AN. 4 CONN. HI FLOW	
VS-360BKSMDK-N	VALVE 360 DEMIN. CAT. 5 CONN. HI FLOW	
Need to order separately:	TIMER SFE W/2 EXTERNAL PILOTS	
	VS-364-A-05 FLANGE 1" ½ FEMALE (ORD. 4 PCS)	
Or:	VS-364-B-05 FLANGE 2" FEMALE (ORD. 4 PCS)	
Or:	VS-364-C-05 FLANGE 2" ½ FEMALE (ORD. 4 PCS)	
Or:	VS-364-D-05 FLANGE 3" FEMALE (ORD. 4 PCS)	
Or:	VS-364-E01-05 FLANGE 50 mm TO BE GLUED FEMALE ABS	
Or:	VS-364-F01-05 FLANGE 63 mm TO BE GLUED FEMALE ABS	
Or:	VS-364-G01-05 FLANGE 75 mmTO BE GLUED FEMALE ABS	

DLCF not included

SIATA PRO FILTER 350

Construction Material:	*ABS + Fibreglass*
I/O connections:	*2"¼ M*
Connection type:	*Side mount*
Timers:	*SFE 101/05 or SFE210/05*
Working pressure:	*2 – 6 bar*
Flow (Δp 1 bar):	*23 m^3/h*
Backwash (Δp 1 bar):	*24 m^3/h*
Recommended for:	*Filter w/tank up to Ø 1100 mm*

Code	Description	Euro
V350F-BW1/05	V.350 BACKWASH ONLY W/SPRINGS FOR 5 I/O CONNECTIONS	
V350F-BWFE/05	V.350 BACKWASH ONLY FOR 5 I/O CONNECTIONS	
V350F-FE/05	V.350 FOR 6 I/O CONNECTIONS	
V350F-FE2/05	V.350 BACKWASH ONLY W/SPRINGS FOR 6 I/O CONNECTIONS	
V350F-FE/06	V.350 PROFILTER SEA WATER FOR 6 I/O CONNECTIONS	

Order separately 5 or 6 fittings (page 232)

SIATA PRO FILTER 351

Construction Material:	*ABS + Fibreglass*
I/O connections:	*2" ¼ M*
Connection type:	*Top*
Timers:	*SFE 101/05 or SFE210/05*
Working pressure:	*2 – 6 bar*
Flow (Δp 1 bar):	*22 m^3/h*
Backwash (Δp 1 bar):	*23 m^3/h*
Recommended for:	*Filter w/tank up to Ø 42"*

Code	Description	Euro
V351F-BW/05	V.351 BACKWASH ONLY TOP MOUNT FOR 3 I/O CONNECTIONS	
V351F/05	V.351 TOP MOUNT FOR 4 I/O CONNECTIONS	
V351F/06	V.351 SEA WATER TOP MOUNT FOR 6 I/O CONNECTIONS	

Order separately 3 or 4 fittings (page 232)

SIATA PRO FILTER 363

Construction Material:	*ABS + Fibreglass*
I/O connections:	*2"¾ M*
Connection type:	*Top*
Timers:	*SFE 101/05 or SFE210/05*
Working pressure:	*2 – 6 bar*
Flow (Δp 1 bar):	*38 m^3/h*
Backwash (Δp 1 bar):	*40 m^3/h*
Recommended for:	*Filter w/tank up to Ø 1400 mm*

Code	Description	Euro
V363F-BW1/05	V.363 BACKWASH ONLY W/SPRINGS FOR 5 I/O CONNECTIONS	
V363F-BWFE/05	V.363 BACKWASH ONLY FOR 5 I/O CONNECTIONS	
V363F-FE/05	V.363 FOR 6 I/O CONNECTIONS	
V363F-FE2/05	V.363 W/SPRINGS FOR 6 I/O CONNECTIONS	
V363F-FE/06	V.363 SEA WATER FOR 6 I/O CONNECTIONS	

Order separately 5 or 6 fittings (page 232)

TIMERS FOR PRO FILTER VALVES

Code	Description	Euro
SFE101/05	TIMER SFE 1 PILOT FOR PROFILTER BACKWASH ONLY	
SFE210/05	TIMER SFE 2 PILOTS FOR PROFILTER	

3 WAY SIATA VALVES 50 mm

Code	Description	Euro
VS-3V-50FE-05	3-WAY VALVE Ø 50 mm	
VS-3V-50FE1-05	3-WAY VALVE Ø 50 mm WITH SECURITY SPRING	

Order separately 3 fittings

3 WAY SIATA VALVES 63 mm

Code	Description	Euro
VS-3V-63FE-05	3-WAY VALVE Ø 63 mm	
VS-3V-63FE1-05	3-WAY VALVE Ø 63 mm WITH SECURITY SPRING	

Order separately 3 fittings

SIATA FITTINGS VALVE 132 and 240

Code	Description	Euro
VS-2265-B-05	KIT FITTING 1" FEMALE THREADED (NYLON)	
VS-2265-C-05	KIT FITTING 1"¼ FEMALE THREADED (NYLON)	
VS-2265-H-05	KIT FITTING 1" ½ EXT > 1" INT THREADED (NYLON)	
VS-2265-I-05	KIT FITTING 2" EXT > 1" ¼ INT THREADED (NYLON)	

SIATA FITTINGS VALVE 230

Code	Description	Euro
VS-494-B-05	KIT FITTING PVC 1" ¼ FEMALE	
VS-494-C-05	KIT FITTING PVC Ø 40 mm FEMALE	
VS-494-F-05	KIT FITTING BRASS 1" ½ MALE	

SIATA FITTINGS VALVE 250, 260, 3V-50, V350, V351

Code	Description	Euro
VS-494-A-05	KIT FITTING PVC Ø 50 mm TO BE GLUED	
VS-494-G-05	KIT FITTING BRASS 2" MALE	
VS-494-H-05	KIT FITTING PVC 1" ½ FEMALE	
VS-494-P-05	KIT FITTING BRASS 1" ½ MALE	

SIATA FITTINGS VALVE 3V-63, V363

Code	Description	Euro
VS-494-I-05	KIT FITTING PVC Ø 63 mm TO BE GLUED	
VS-494-I1-05	KIT FITTING BRASS/PVC Ø 63 mm	
VS-494-I2-05	KIT FITTING BRASS/PVC 2"	
VS-494-R-05	KIT FITTING PVC 2"	

SIATA FITTINGS VALVE 360

Code	Description	Euro
VS-364-A-05	FLANGES 1" ½ THREADED F	
VS-364-B-05	FLANGES 2" THREADED F	
VS-364-C-05	FLANGES 2" ½ THREADED F	
VS-364-D-05	FLANGES 3" THREADED F	
VS-364-E01-05	FLANGES 50 mm TO BE GLUED F ABS	
VS-364-F01-05	FLANGES 63 mm TO BE GLUED F ABS	
VS-364-G01-05	FLANGES 75 mm TO BE GLUED F ABS	
VS-364R-Q01/05	FLANGES 90 mm FOR DN80 TUBE	
VS-364R-D/05	FLANGES 3" THREADED RINF. W/METAL RING	

TURBINE METERS

Code	Description	Euro
VS-2296-05	TURBINE METER G 1" ½	
VS-2297-2M-05	TURBINE METER G ¾" (2 FIELD MEGNET)	
VS-2297-05	TURBINE METER G ¾" (4910990)	

ACCESSORIES FOR SIATA DEMI AND DUPLEX SYSTEMS

Code	Description	Euro
VS-5190	VALVE CONTROLLER-HOLDER ASSEMBLY	
VS-VAA99631	132 AND 230 DEMIN. AND DUPLEX V. CONTR.-HOLDER ASSEMBLY W/PILOTS	
VS-VAA99630	250 DEMIN. AND DUPLEX V. CONTR.-HOLDER ASSEMBLY W/PILOTS	
VS-VAA99628	360 DEMIN. AND DUPLEX V. CONTR.-HOLDER ASSEMBLY W/5 PILOTS	
VS-VAA99627	360 DEMIN. AND DUPLEX V. CONTR.-HOLDER ASSEMBLY W/7 PILOTS	
VS-2161-05	T SUNCTION REGULATOR	
VS-2162-A-05	NO RETURN VALVE (BLACK) NAOH	
VS-2162-K1-05	NO RETURN VALVE ANTIACID (HCL) VITON FPM	
VS-2163-05	CONDUCTIVE PROBE	
VS-2184-05	INTERFACE AQUA IONIC SERIES SINGLE	
VS-563-V-05	FLAT SEAL FOR RETURN VALVE IN VITON	

AQUAMATIC DIAPHRAGM VALVES

Code	Description	Euro
AQ1070154	VALVE 521 AQUAMATIC 1" N.A. STD	
AQ1070204	COUPLE OF PVC PIPE UNIONS 32 mm FOR V. 521 STD	
AQ1079611	VALVE 520 AQUAMATIC ½" N.A. BUTYL	
AQ1070191	COUPLE OF BUTYL PIPE UNIONS 20 mm FOR V. 520	
AQ1240395	VALVE 520 AQUAMATIC ½" N.A. VITON	
AQ1070192	COUPLE OF VITON PIPE UNIONS 20 mm FOR V. 520	

AQ1240395

AQ1240395

CONTROLLERS

Code	Description	Euro
VS-SFE0-05	TIMER SFE CRONO	
BOX-VS-SFE0-05	Box includes 4 TIMER SFE CRONO	
VS-SFE0-06	SFE METER CONTROLLER	
BOX-VS-SFE0-06	Box includes 4 SFE METER CONTROLLER	
VS-SFE201-05	SFE CONTROLLER CRONO W/2 EXTERNAL PILOTS	
VS-SFE201-06	SFE METER CONTROLLER W/2 EXTERNAL PILOTS4	
VS-AC5-02-05	AQUACUBIC 5-PILOTS DUPLEX CONTROLLER	
VS-AC7-02-05	AQUACUBIC 7-PILOTS DUPLEX CONTROLLER	
VS-AI5-02-05	AQUAIONIC 5-PILOTS DEMINERALIZATION CONTROLLER	
VS-AI7-02-05	AQUAIONIC 7-PILOTS DEMINERALIZATION CONTROLLER	
VS-92F	AUXILIARY MICROSWITCH FOR SIATA CONTROLLER	

VS-AC5-02-05

VS-AI7-02-05

VS-SFE201-05

VS-SFE0-06

RUNXIN TMF69A3

Construction Material:	Noryl
I/O connections:	¾" – ½" outlet
Regeneration cycle time:	Adjustable
Regeneration:	Upflow
Programming:	Electronic meter
Max flow:	2 m3/h
Tanks:	From 6" to 12" fitting 2" ½ UN
Recommended for:	Little residential softeners up to 50 l resins

Meter valves for residential softeners with upflow regeneration.

Code	Description	Euro
RXN-TMF69A3	Runxin meter valve	
BOX-RXN-TMF69A3	Box includes 6 valves Runxin meter valve	
RXN-BP69A3	By pass for 69A3 valve	
Prices include:	Transformer I/O fittings Auxiliary microswitch	
Need to order separately:	ADS-27 UNDERVALVE NOZZLE D8-27 BOTTOM NOZZLE TB-27 DISTRIBUTOR TUBE	

RUNXIN TMF56F 3-WAY MANUAL VALVE

Construction material:	Noryl
I/O connections:	1"
Cycles:	Service, backwashing, washing
Max flow rate:	4 m^3/h
Tanks:	From 6" to 12" fitting 2" ½ UN
Recommended for:	Little residential filter

Backwashing manual valve for little residential filter with steel handle.

Code	Description	Euro
RXN-TMF56F	3-way manual valve with steel handle	
BOX-RXN-TMF56F	Bow includes 6 valves RXN-TMF56F	
Need to order separately:	ADS-32 UNDERVALVE NOZZLE D8-32 BOTTOM NOZZLE TB-32 DISTRIBUTOR TUBE	

Diaphragm valves

Two way diaphragm valves N.O. or N.C.
The closure is created using a shutter that is held on a seat on the valve body. The shutter is operated by the membrane through a shaft that runs on a head corrected with an o'ring seal. It is possible to have a partial opening with a limit stop. The locking command is accomplished through a 3-way-pilot valve.
Body: cast iron G25 - Seals: BUMA - Membrane: BUMA reinforced w/Nylon. Shutter: AISI 304 and brass.

N.O. DIAPHRAGM VALVES

Code	Description	Euro
MV A1A 01	3/8" NA	
MV A1A 02	1/2" NA	
MV A2A 01	3/4" NA	
MV A2A 02	1" NA	
MV A3A 01	1"1/4 NA	
MV A3A 02	1"1/2 NA	
MV A7A 01	2" NA	
MV A4A 02	2"1/2 NA	
MV A4A 03	3" NA	
MV A5A 00	DN 80 NA flanged	
MV A6A 00	DN 100 NA flanged	

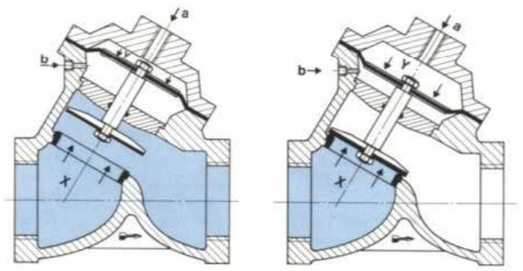

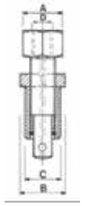

Limit stop

Replacement membrane

LIMIT STOP

Code	Description	Euro
LP-1	3/8"-1/2"	
LP-2	3/4" - 1"	
LP-3	1"1/4 - 1"1/2	
LP-7	2"	
LP-4	2"1/2 - 3" threaded	
LP-5	DN 80 flanged	
LP-6	DN 100 flanged	

N.C. DIAPHRAGM VALVES

Code	Description	Euro
MV A1C 01	3/8" NC	
MV A1C 02	1/2" NC	
MV A2C 01	3/4" NC	
MV A2C 02	1" NC	
MV A3C 01	1"1/4 NC	
MV A3C 02	1"1/2 NC	
MV A7C 01	2" NC	
MV A4C 02	2"1/2 NC	
MV A4C 03	3" NC	
MV A5C 00	DN 80 NC flanged	
MV A6C 00	DN 100 NC flanged	

NBR MEMBRANE SPARE PARTS

Code	Description	Euro
ME-1	3/8"-1/2"	
ME-2	3/4"- 1"	
ME-3	1"1/4 - 1"1/2	
ME-7	2"	
ME-4	2"1/2 - 3" threaded	
ME-5	DN 80	
ME-6	DN 100	

AQUASTAR RO-TOUCH 02

Second generation three-phase electrical panel. It is suitable for the management of reverse osmosis plants (RO) that use a high pressure pump with a maximum power of 15 kW.

The logic of functioning of this new equipment is the result of Idroservice's long experience of reverse osmosis plants.

The software installed allows multiple customizations. It is possible to personalize it for different plant needs and conditions.

The software is multi-language. The languages installed are ENGLISH, FRENCH and ITALIAN.

For example, the software can:

- *Manage 4 different modes for the flushing of membranes;*
- *Use 5 different start-ups for the high pressure pump;*
- *Read flow rate meters on the permeate, concentrate and recirculation;*
- *Read max/min pressure meters;*
- *Switch all the utilities during the start-up to manual control;*
- *Manage the times and delays of pumps, valves, sensors etc.;*
- *Display the history of alarms and operations performed on screen and download on Pen Drive USB;*
- *Display the history of flow rate and pressure trends on screen and download on Pen Drive USB;*
- *Guide you in the resolution of problems with a Help section that displays problems, reasons and solutions for any alarms detected;*
- *Provide the possibility to monitor and control the plant on-line at a remote location.*

Included with the panel:

- *Touch screen colour Wide Screen 7";*
- *PLC Siemens CPU S7/1200 with 14 DI, 2 AI and 10 DO;*
- *Contactor for pump 32 A (16kW) comprehensive thermal switch;*
- *Certified safety module following standards present in EN 60204-1 and with emergency button;*
- *Service contactor for the safety module;*
- *Micro relè for exit tension control;*
- *Metal cabinet;*
- *Conductivity digital meter for the control of exit water;*
- *Software for the management of a complete reverse osmosis plant;*

Thanks to the high performance PLC Siemens and the easy and intuitive Touch Screen, the RO-Touch 02 manages the following inputs:

- *Permeate conductivity alarm;*
- *Emergency button;*
- *Auxiliary device alarm (example: REDOX, UV, not treated water conductivity meter, pH, etc.);*
- *Non treated water storage tank float;*
- *Permeate storage tank float;*
- *Chemicals storage tank float (with an alarm to show when anti-scalants, chlorine reducer etc. are finishing)*
- *Pre-treatment filter backwashing;*
- *Minimum pressure switch;*
- *Maximum pressure switch;*
- *HP pump alarm;*
- *Supply pump alarm;*
- *Permeate flow rate meter with digital signal;*
- *Concentrate flow rate meter with digital signal;*
- *Recirculation flow rate meter with digital signal;*
- *Minimum pressure meter with analogue signal 1/10 V;*
- *Maximum pressure meter with analogue signal 1/10 V.*

And the following outputs:
- *HP pump (contactor of soft start);*
- *Pre-feeding pumping unit of the RO plant;*
- *Solenoid input valve;*
- *Solenoid flushing valve;*
- *Solenoid flushing valve with clean water;*
- *Meter pumps for pre-treatment and post-treatment;*
- *Restart signal after stop;*
- *Remote alarm;*

Code	Description	Euro
RO-TOUCH02	THREE PHASE EL. PANEL FOR RO PLANTS	

Optional sensors and meters for RO-TOUCH02

RO-T02-SP06	PRESSURE SENSOR 0/6 BAR	
RO-T02-SP0-16	PRESSURE SENSOR 0/16 BAR	
RO-T02-SP0-25	PRESSURE SENSOR 0/25 BAR	
RO-T02-TF1	FLOW RATE METER 1" - MAX 5500 l/h	
RO-T02-TF1-1/2	FLOW RATE METER PADDLE W. FOR PVC TUBE 50 mm	
RO-T02-TF2	FLOW RATE METER PADDLE W. FOR PVC TUBE 63 mm	
RO-T02-TF3	FLOW RATE METER PADDLE W. FOR PVC TUBE 90 mm	

Home screen.

Antiscalants dosage screen.

Flow rate electronic meter (optional).

Osmosis standby screen.

Data menu screen.

Pressure electrical meter (optional).

Login screen.

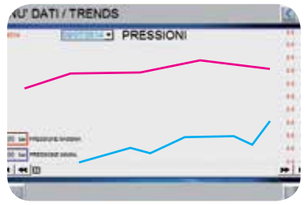

Trends data screen.

Flow rate electronic meter (optional).

In case of particular needs, it is possible to implement the following options:

PACK 1

Includes 8 digital optional inputs:

- Non treated water conductivity;
- Permeate conductivity;
- Electrical phase fault;
- Non treated water pH;
- Permeate pH
- Non treated water redox;
- Permeate redox;
- Metering pumps running sensor.

Code	Description	Euro
RO-T02-PK1	PACK 1 – 8 DIGITAL ALARM IMPUTS	

Optional accessories with digital signal for PACK 1

RO-T02-LDSCD-FR	CONDUCTIVITY METER W/ALARM OUTPUT + PROBE	
RO-T02-LDSPH-FR	PH W/ALARM OUTPUT + PH PROBE	
RO-T02-LDSRH-FR	REDOX W/ALARM OUTPUT + REDOX PROBE	
RO-T02-LDPHRH-FR	PH&REDOX W/ALARM OUTPUT + PROBES	
RO-T02-LDPHCD-FR	PH&CONDUCT. W/ALARM OUTPUT + PROBES	
EM-ETEPTCH18	TEMPERATURE PROBE FOR CD, RH, PH	
RO-T02-PMV30A575	MULTIFUNCTION RELE' CIRCUIT PROTECTION	
RO-T02-SEFL	METERING PUMP FLOW RATE SENSOR (FOR KPO)	
RO-T02-KPO05-01	METERING PUMP 1 L / 5 bar	

PACK 2

Includes 8 analogue optional inputs:

- Permeate conductivity (the signal is taken from the internal device);
- Non treated water conductivity;
- Permeate conductivity;
- Electrical phase fault;
- Non treated water pH;
- Permeate pH;
- Non treated water redox;
- Permeate redox;
- Non treated water temperature.

This option allows you to display the data from instruments mounted on the Touch Screen. Indispensable for remote control of the plant (see PACK 3).

Code	Description	Euro
RO-T02-PK2	PACK 2 – 8 ANALOGUE ALARM IMPUTS	

Optional accessories with analogue signal for PACK 2

RO-T02-LDSCD-AO	CONDUCTIVITY METER W/4-20mA OUTPUT + PROBE	
RO-T02-LDSPH-AO	PH W/4-20mA OUTPUT + PH PROBE	
RO-T02-LDSRH-AO	REDOX W/4-20mA OUTPUT + REDOX PROBE	
RO-T02-LDPHRH-AO	PH&REDOX W/4-20mA OUTPUT + PROBES	
RO-T02-LDPHCD-AO	PH&CONDUCT. W/4-20mA OUTPUT + PROBES	

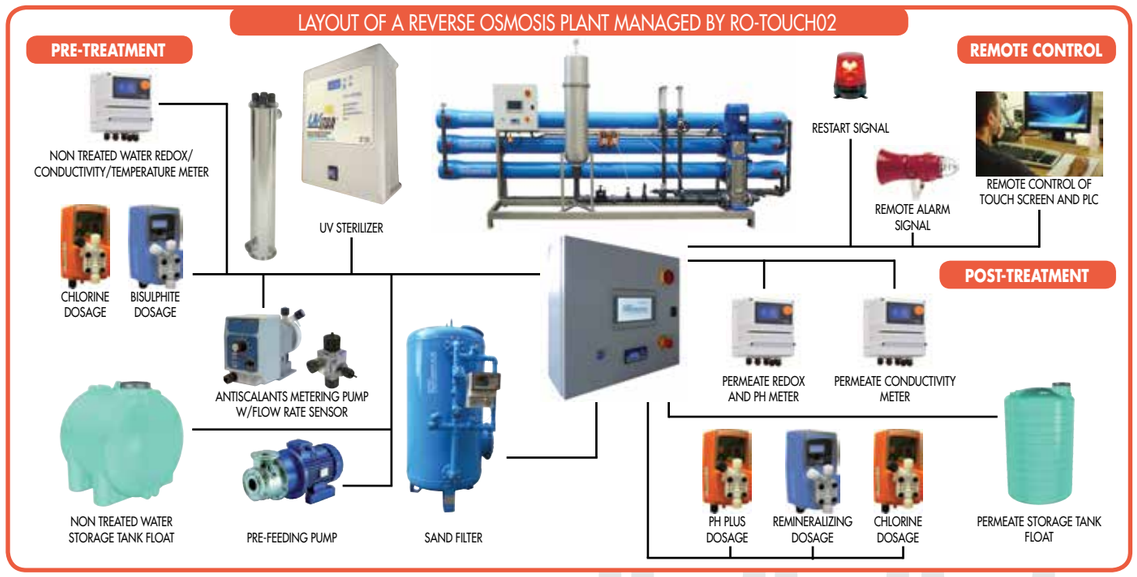

PACK 3

This option allows you to manage the plant from your PC. All the Touch screen information will be available directly on the screen of your PC and you can simply control the RO plant using your mouse. You can turn on the SMS alarm function if needed. It is not necessary to create a VPN because the system works independently.
Any network configuration or Firewall admission is not necessary. An internet connection to a LAN network or a SIM UMTS/HSUPA/ EDGE/GRPS and the licence to use the software of the service provider is essential.

Code	Description	Euro
RO-T02-PK3	PACK 3 WEB REMOTE CONTROL PLC AND TOUCH S.	

Input monitoring screen.

Router.

Manual control screen.

Downloads screen.

INPUT

- PERMEATE CONDUCTIVITY ALARM
- EMERGENCY BUTTON
- AUXILIARY ALARM
- NON TREATED WATER STORAGE TANK FLOAT
- PERMEATE STORAGE TANK FLOAT
- CHEMICALS STORAGE TANK FLOAT
- FILTER BACKWASHING
- MINIMAL PRESSURE SWITCH
- MAXIMUM PRESSURE SWITCH
- HP PUMP ALARM
- SUPPLY PUMP ALARM
- PERMEATE FLOW RATE METER
- CONCENTRATE FLOW RATE METER
- RECIRCULATION FLOW RATE METER
- MINIMAL PRESSURE METER
- MAXIMUM PRESSURE METER

AQUASTAR RO-TOUCH 02

OUTPUT

- HP PUMP (METER OR SOFT START)
- FRONTLOADING RO PUMP
- SOLENOID VALVE IN
- FLUSHING SOLENOID VALVE
- FLUSHING SOLENOID VALVE WITH PERMEATE WATER
- PRE-TREATMENT AND POST-TREATMENT METER PUMPS
- RESTART SIGNAL
- REMOTE ALARM

AQUASTAR LOGO TD

AQUASTAR programmers LOGO TD are suitable for softeners and filters with diaphragm valves or pneumatic actuated butterfly valves. *They have been designed to handle the regenerative cycles of a water softener with 6 valves or a filter with 5 valves. Maximum attention has been paid to make the new electronic key pad AQUASTAR LOGO TD easy to use. The new electronic AQUASTAR LOGO-TD programmer is designed to make the planning of regeneration as easy as possible.*

It consists of a watertight box made of ABS and micro PLC Siemens with interface LCD display and function keys.

The 4 function keys allow you to easily start an immediate regeneration (or delay it to 2 A.M.), or to advance cycles when you start up the plant.

The Siemens PLC has the capacity to calculate precisely the time of regeneration of the resins based on:

- desired regenerative amount (g of NaCl per resin/litre);
- ejector suction flow rate;
- quantity of resins in the softener.

Thus it is no longer necessary to carry out laborious calculations. The complete and efficient regeneration of resins is guaranteed, with the minimum use of water and as low consumption of salt as possible, eliminating any waste.

The programmer also allows you to:

- get a 24V- AC contact when the facility is in regeneration/ backwash;
- effectuate the backwash of the filter with clean water (with the control of the clean water tank for backwashing);
- to inhibit the regeneration/backwash of the system (to put on stand-by the start of regeneration while the contact persists).

Within the LOGO TD is installed the software to manage a simplex system:

- softeners with time clock regen. (3 + 1 cycles down-flow);
- softeners with meter/delayed regen. with water reserve (3 + 1 cycles down-flow);*
*- softeners with meter/immediate regen. * (3 + 1 cycles down-flow);*
- filters with time clock backwash (2 + 1 cycles);
*- filters with backwash depending on an external pulse (e.g. Δp **);*
*- filters or softeners with "waterfall" regeneration (SLAVE programme ***).*

On request it is possible to ask for software with volumetric/delayed regeneration with variable reserve statistics.

Code	Description	Euro
LOGO-TD	ELECTRIC PANEL SOFTENER / FILTER SIMPLEX	
LOGO-TD-ESP-DX	ELECTRIC PANEL SOFTENER / FILTER DUPLEX	
LOGO-TD-ESP-MS	ELECTRIC PANEL SOFTENER/FILTER MASTER	
RB944CVC	BATTERY SET OF SOLENOID 3 WAY PILOTS VALVE	
AZ010093	BATTERY SET OF SOLENOID 5 WAY PILOTS VALVE	
RR08040P	ELBOW M 1/8" THREAD. FOR 6 mm HOSE	
RR845P	ELBOW M 1/4" THREAD. FOR 6 mm HOSE	
RR0715	ELBOW F 1/8" THREAD. FOR 6 mm HOSE	
RR1315P	TEE FOR 6 mm HOSE	
LOGO-TD-KIT01	ELECTRIC PANEL SIMPLEX ASSEMBLED W/BRACKET, GAUGES, 3 WAY PILOTS VALVES, FITTINGS	
LOGO-TD-KIT02	ELECTRIC PANEL SIMPLEX ASSEMBLED W/BRACKET, GAUGES, 5 WAY PILOTS VALVES, FITTINGS	
LOGO-TD-ESP-DX-KIT01	ELECTRIC PANEL DUPLEX ASSEMBLED W/BRACKET, GAUGES, 3 WAY PILOTS VALVES, FITTINGS	
LOGO-TD-ESP-DX-KIT02	ELECTRIC PANEL DUPLEX ASSEMBLED W/BRACKET, GAUGES, 5 WAY PILOTS VALVES, FITTINGS	
LOGO-TD-ESP-MS-KIT01	ELECTRIC PANEL MASTER ASSEMBLED W/BRACKET, GAUGES, 3 WAY PILOTS VALVES, FITTINGS	
LOGO-TD-ESP-MS-KIT02	ELECTRIC PANEL MASTER ASSEMBLED W/BRACKET, GAUGES, 5 WAY PILOTS VALVES, FITTINGS	

Note

** for volumetric softeners you need a pulse sender water meter (see page 127).*

*** for backwash filters with ΔP it is necessary to have the appropriate instrument (see page 124).*

**** for "waterfall regeneration" of max 5 systems it is necessary to get a LOGO TD MASTER.*

AQUASTAR LOGO TD ESP DUPLEX

Programmer AQUASTAR LOGO TD ESP DX for volumetric softeners DUPLEX with diaphragm valves or pneumatic actuated butterfly valves. Same features as the TD LOGO but with the ability to manage 12 valves.

AQUASTAR LOGO TD ESP MASTER

Programmer AQUASTAR LOGO TD ESP MS for filtration systems with multiple waterfall backwash. The MASTER programmer controls the valves of the plant in which it is installed and starts up the backwash of the other facilities managed by LOGO TD simplex to which it is connected. Same features as the TD LOGO but with the possibility of managing up to 5 installations (with n°1 LOGO TD ESP MASTER and n° 4 LOGO TD) with waterfall regeneration.

Note:

The AQUASTAR programmer TD LOGO feeds by its outputs 24V - AC the battery set of solenoid 3/5 way valves which in turn pilots (with air or water) the valves of the system.

INPUT

- PULSE METER
- DIFFERENTIAL PRESSURE GAUGE
- INHIBITOR FOR REGENERATION 7 BACKWASH
- REGENERATION FROM EXTERNAL IMPUT
- CLEAN WATER STORAGE TANK FLOAT
- STAND BY (TO CLOSE ALL THE VALVES)

LOGO TD SIMPLEX

OUTPUT

- SOLENOID PILOT VALVE 1 24V-AC
- SOLENOID PILOT VALVE 2 24V-AC
- SOLENOID PILOT VALVE 3 24V-AC
- SOLENOID PILOT VALVE 4 24V-AC
- BACKWASH/REGENERATION 24V-AC

- SLAVE 1 (SIGNAL COMING FROM FILTER 1)
- SLAVE 2 (SIGNAL COMING FROM FILTER 2)
- SLAVE 3 (SIGNAL COMING FROM FILTER 3)
- SLAVE 4 (SIGNAL COMING FROM FILTER 4)

LOGO TD ESP MASTER (INPUT AND OUTPUT ADDED TO LOGO TD SIMPLEX)

- SLAVE 1 (SIGNAL SENT FROM FILTER 1 TO START REGEN.)
- SLAVE 2 (SIGNAL SENT FROM FILTER 2 TO START REGEN.)
- SLAVE 3 (SIGNAL SENT FROM FILTER 3 TO START REGEN.)
- SLAVE 4 (SIGNAL SENT FROM FILTER 4 TO START REGEN.)

LOGO TD ESP DUPLEX (INPUT AND OUTPUT ADDED TO LOGO TD SIMPLEX)

- SOLENOID PILOT VALVE 4 24V-AC
- SOLENOID PILOT VALVE 4 24V-AC
- SOLENOID PILOT VALVE 4 24V-AC
- SOLENOID PILOT VALVE 4 24V-AC

AQUASTAR RO MINI

Electronic single-phase controller suitable for the management of reverse osmosis unit (RO) with maximum power 1,1kW – 8A.

It consists of an electrical box in ABS, dim. (WxHxD) 165x 158x 125 mm containing the electronic power card and the LCD card. Totally automated it operates all the components necessary to the automation of the RO unit by means of the following digital inputs:

- thermal switch high pressure RO pump;
- permeate storage tank float;
- chemical reagents tank float;
- low pressure switch;
- high pressure switch;
- backwash or regeneration of pre-treatment units;
- conductivity probe.

and the following digital outputs:

- upstream feeding pump (clean contact);
- solenoid input valve (230V-50 Hz,-400W max) ;
- high pressure RO pump (230V-50Hz-1.1 kW max) ;
- solenoid flushing valve (230V-50 Hz,-400W max) ;
- dosing pumps (230V-50 Hz);
- remote alarm (auxiliary contact).

The LCD display LCO displays in real time:

-the conductivity of the water produced;
-the total of working hours;
and causes of a STOP such as:
-permeate storage tank full;
- low pressure alarm;
- high pressure alarm;
- high permeate conductivity alarm;
- thermal RO pump alarm;
- backwash/regeneration of pre-treatment units;
- lack of pre-treatment chemicals (e.g. antiscalant).

You can change the time and delays in opening and closing of valves, feeding pump, and the high pressure RO pump depending on the characteristics of the system.
The flushing is handled with raw water and its duration is adjustable.

INPUT *OUTPUT*

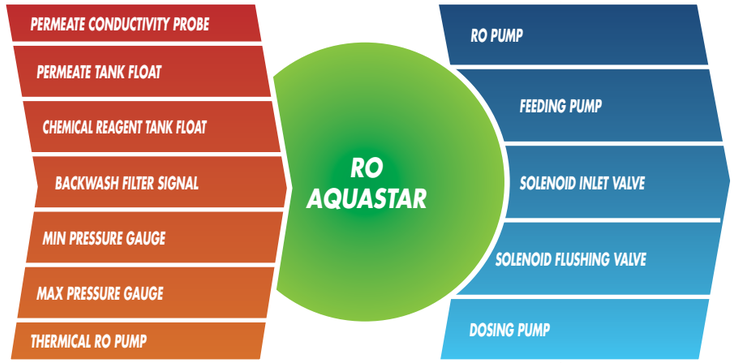

Note:
The conductivity probe is included.

Code	Description	Euro
RO-MINI	CONTROLLER FOR THE MANAGEMENT OF REVERSE OSMOSIS UNIT	

Reverse osmosis membranes

FILMTEC Membranes

FILMTEC Extra Low Energy (XLE) Elements for Commercial Systems

Features

New FILMTECTM XLE elements offer better system performance and economics by operating at very low applied pressure. XLE membrane, made with a patented technology provides consistent and reliable system performance. And for added convenience, XLE elements are available in a dry state for rapid start-up (see Figure 1 on reverse). The new XLE series of elements replaces TW30LE elements which were made with an older membrane technology.

Codice	Part Number	Active Area ft² (m²)	Applied Pressure psig (bar)	Permeate Flow Rate gpd (m³/d)	Stabilized Salt Rejection (%)	Euro
XLE-2521	154530	13 (1.2)	100 (6.9)	330 (1.3)	99.0	
XLE-2540	154543	28 (2.6)	100 (6.9)	770 (2.9)	99.0	
XLE-4040	154546	87 (8.1)	100 (6.9)	2,600 (9.8)	99.0	
XLE-440	171227	440 (41)	100 (6.9)	12,700 (48)	99.0	

1. Permeate flow and salt rejection based on the following test conditions: 500 ppm NaCl, pressure specified above, 77°F (25°C) and 15% recovery.
2. Permeate flows for individual elements may vary +25/-15%.
3. Minimum stabilized salt rejection is 98.0%.
4. The above specifications are benchmark values. Please be sure to operate according to system design guidelines.

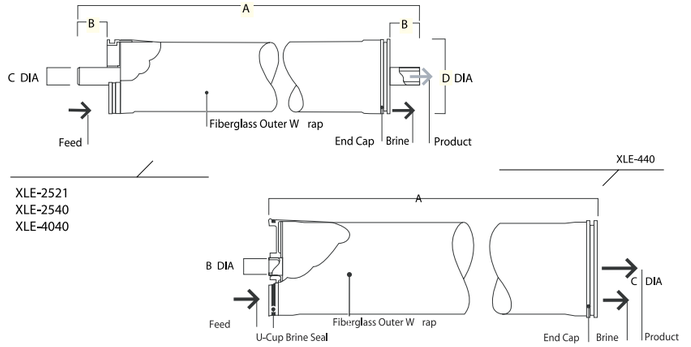

Codice	Maximum Feed Flow Rate gpm (m³/h)	Dimensions – Inches (mm) A	B	C	D
XLE-2521	6 (1.4)	21.0 (533)	1.19 (30.2)	0.75 (19)	2.4 (61)
XLE-2540	6 (1.4)	40.0 (1,016)	1.19 (30.2)	0.75 (19)	2.4 (61)
XLE-4040	14 (3.2)	40.0 (1,016)	1.05 (26.7)	0.75 (19)	3.9 (99)
XLE-440		40.0 (1,016)	1.50 (38)	7.9 (201)	

1. Refer to FilmTec Design Guidelines for multiple-element systems. *1 inch = 25.4 mm*
2. XLE-2521 and XLE-2540 elements fit nominal 2.5-inch I.D. pressure vessel. XLE-4021 and XLE-4040 elements fit nominal 4-inch I.D. pressure vessel. XLE-440 fits nominal 8-inch (203 mm) I.D. pressure vessel.

• Membrane Type	Polyamide Thin-Film Composite
• Maximum Operating Temperature	113°F (45°C)
• Maximum Operating Pressure	600 psig (41 bar)
• Maximum Pressure Drop	15 psig (1.0 bar)
• pH Range, Continuous Operationa	2 – 11
• pH Range, Short-Term Cleaning (30 min.)b	1 – 12
• Maximum Feed Silt Density Index (SDI)	SDI 5
• Free Chlorine Tolerancec	<0.1 ppm

[a] Maximum temperature for continuous operation above pH 10 is 95°F (35°C).
[b] Refer to Cleaning Guidelines in specification sheet 609-23010.
[c] Under certain conditions, the presence of free chlorine and other oxidizing agents will cause premature membrane failure. Since oxidation damage is not covered under warranty, FilmTec recommends removing residual free chlorine by

PRODOTTO CERTIFICATO a norma DM 174/04 ACQUE POTABILI

applied membranes INC.®

Located in California, Applied Membranes Inc. is one of the largest producers of membranes of the United States.

For more than 25 years they have produced reverse osmosis membranes using Filmtec film and the most modern construction techniques, ensuring constant quality and durability of its products.
The membranes are certified NSF/ANSI Standard 058.
In the Italian market Idroservice srl obtained the certification for use with drinking water products.

Made In USA

ISO 9001:2008 Certified Company

INDEPENDENTLY NSF CERTIFIED

MEMBER Water Quality ASSOCIATION

RESIDENTIAL THIN FILM ELEMENTS

TECHNICAL DATA

Model	Flow (l/day)	Salt rejection (%)	Dimension (mm) LxWxDxE
M-T1812A75-ID	285 a 4,7 bar	94-98	298 x 250 x 45 x 17
M-T1812A100-ID	380 a 4,7 bar	94-98	298 x 250 x 45 x 17
M-T1812A150-ID	560 a 4,7 bar	94-98	298 x 254 x 50 x 17

Working pressure	8,6 bar max
System temperature	45°C max
Turbidity	1 NTU max
S.D.I.	5 max
Chlorine	0
Recovery	25% max

Prices page 178

NSF *M-T1812A75, M-T1812A100 are NSF/ANSI STANDARD 058 (Reverse Osmosis Drinking Water Treatment Systems) certified osmosis membrane.*

Technical specifications are calculated on water having the following characteristics: salinity 500mg/l, pressure 4,7bar, temperature 25°C, pH7-8, recovery 15%

TAP WATER EXTRA LOW ENERGY THIN FILM ELEMENTS

TECHNICAL DATA

Model *	Flow (l/day)	Salt rejection (%)	Dimension (mm) LxWxDxE
M-T2521AXLE	1382 a 7 bar	98	533 x 480 x 61 x 19
M-T2540AXLE	3217 a 7 bar	98	1016 x 960 x 61 x 19

equivalents to FILMTEC XLE

Max pressure	35 bar
Working pressure	7 bar
System temperature	45°C max
Turbidity	1 NTU max
S.D.I.	5 max
Chlorine	0
Recovery	15% max

Code	Euro
M-T2521AXLE	
M-T2540AXLE	

Technical specifications are calculated with water having the following characteristics: salinity of 500 mg/l, pressure 7 bar, temperature 25°C , pH 8, recovery 10%. Production can vary from-15% to + 25% between an element and another. It is not recommended to work membranes at higher pressure and flow than those indicated because you might have premature fouling of membranes with low productivity and high conductivity of the permeate.

applied membranes INC.®

TECHNICAL DATA

Model*	Flow (l/day)	Salt rejection (%)	Dimension (mm) LxWxDxE
M-T4040AXLE	10825 a 7 bar	99	1016 x480 x 99 x 19
M4040I	INTERCONNECTOR FOR 4" MEMBRANES LE		

*equivalents to FILMTEC XLE

Max pressure	21 bar
Working pressure	7 bar
System temperature	45°C max
Turbidity	1 NTU max
S.D.I.	4 max
Chlorine	0
Recovery	15% max

Code	Euro
M-T4040AXLE	
M4040I	

Technical specifications are calculated with water having the following characteristics: salinity of 500 mg/l, pressure 7 bar, temperature 25°C , pH 8, recovery 10%. Production can vary from-15% to + 25% between an element and another. It is not recommended to work membranes at higher pressure and flow than those indicated because you might have premature fouling of membranes with low productivity and high conductivity of the permeate.

BRACKISH WATER LOW ENERGY THIN FILM ELEMENTS

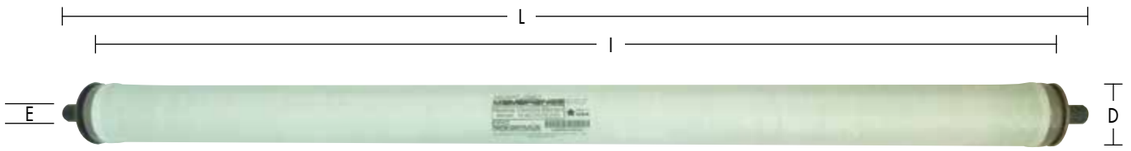

TECHNICAL DATA

Model*	Flow (l/day)	Salt rejection (%)	Dimension (mm) LxWxDxE
M-B2540ALE	3217 a 10 bar	98	1016 x 960 x 61 x 19
M-B4040ALE	10220 a 10 bar	98	1016 x 960 x 99 x 19
M4040I	INTERCONNECTOR FOR 4" MEMBRANES LE		

*equivalents to FILMTEC LP

Max pressure	41 bar
Working pressure	10 bar
System temperature	45°C max
Turbidity	1 NTU max
S.D.I.	4 max
Chlorine	0
Recovery	15% max
M-B2540ALE membrane equivalents to Filmtec	LP 2540
M-B4040ALE membrane equivalents to Filmtec	LP 4040

Code	Euro
M-B2540ALE	
M-B4040ALE	
M4040I	

Technical specifications are calculated with water having the following characteristics: salinity of 2000 mg/l, pressure 7 bar, temperature 25°C , pH 8, recovery 10%. Production can vary from-15% to + 25% between an element and another. It is not recommended to work membranes at higher pressure and flow than those indicated because you might have premature fouling of membranes with low productivity and high conductivity of the permeate.

FIBERGLASS PRESSURE VESSELS AQUASTAR FOR MEMBRANES 2540 AND 4040

Pressure vessels made of fibreglass for membranes 2540 and 4040. Tested at 1,5 times the operative pressure.

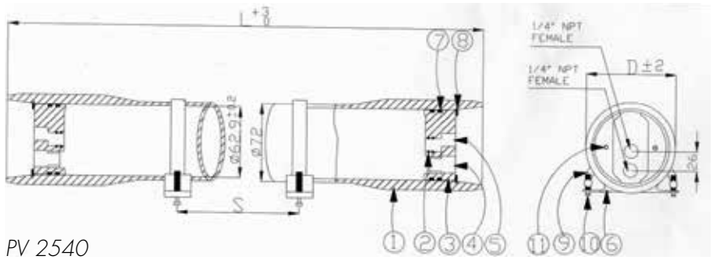

PV 2540

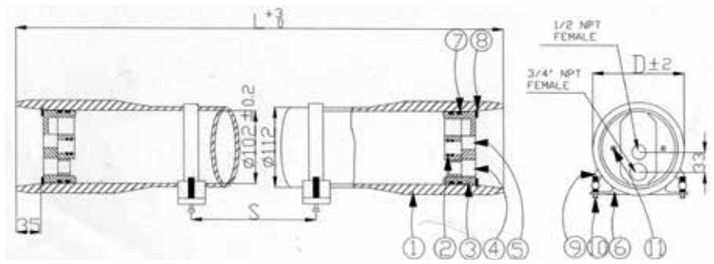

PV 4040

n.	Description	Material
1	Membrane vessel	Fibreglass
2	O'ring permeate output	Silicone
3/4/5	Plug	ABS
6	Bracket	Rubber
7	Plug seal	Silicone
8	Saddle	SS304
9	Strap	SS304
10	Strap screw	SS304
11	Strap nut	SS304

Model	membranes n.	Max operative pressure (bar)	Permeate	Concentrate	Euro
PV2540X1-300	1 x 2540	20	1/4"	1/4"	
PV4040X1-250	1 x 4040	17	1/2"	3/4"	
PV4040X2-250	2 x 4040	17	1/2"	3/4"	

Dimensions

Model	Dimensions and Weigh			
	L (mm)	W (mm)	D (mm)	Weigh (kg)
PV2540X1-300	1116	610	80	6,5
PV4040X1-250	1128	610	130	9,9
PV4040X2-250	2144	1350	130	16,5

Fibreglass pressure vessels

PRESSURE VESSEL ROSHELL
Construction material: epoxy resin reinforced with fibreglass.
Excellent corrosion resistance and better mechanical strength than conventional vessels, obtained through select resins from the main European producers and advanced production process with final cooking of the fibreglass.

- Pressures up to 1200 PSI (84 bar).
- Connections End Port or Side Port
- Availability for batteries from 1 to 8 membranes.

RoShell 8" (250 PSI)

Code	membranes n.	Feed and conc. connections	Perm. Connections	Position connections	Euro
RS801E250	1	1"1/2	1"	End port	
RS802E250	2	1"1/2	1"	End port	
RS803E250	3	1"1/2	1"	End port	
RS804E250	4	1"1/2	1"	End port	
RS805E250	5	1"1/2	1"	End port	
RS806E250	6	1"1/2	1"	End port	
RS807E250	7	1"1/2	1"	End port	
RS801E250SP	1	1"1/2	1"	Side port	
RS802E250SP	2	1"1/2	1"	Side port	
RS803E250SP	3	1"1/2	1"	Side port	
RS804E250SP	4	1"1/2	1"	Side port	
RS805E250SP	5	1"1/2	1"	Side port	
RS806E250SP	6	1"1/2	1"	Side port	
RS807E250SP	7	1"1/2	1"	Side port	

RoShell 8" (400 PSI)

Code	membranes n.	Feed and conc. connections	Perm. Connections	Position connections	Euro
RS801E400	1	1"1/2	1"	End port	
RS802E400	2	1"1/2	1"	End port	
RS803E400	3	1"1/2	1"	End port	
RS804E400	4	1"1/2	1"	End port	
RS805E400	5	1"1/2	1"	End port	
RS806E400	6	1"1/2	1"	End port	
RS807E400	7	1"1/2	1"	End port	
RS801E400SP	1	1"1/2	1"	Side port	
RS802E400SP	2	1"1/2	1"	Side port	
RS803E400SP	3	1"1/2	1"	Side port	
RS804E400SP	4	1"1/2	1"	Side port	
RS805E400SP	5	1"1/2	1"	Side port	
RS806E400SP	6	1"1/2	1"	Side port	
RS807E400SP	7	1"1/2	1"	Side port	

RoShell 8" (1200 PSI)

Code	membranes n.	Feed and conc. connections	Perm. Connections	Position connections	Euro
RS801E1200	1	1"1/2	1"	End port	
RS802E1200	2	1"1/2	1"	End port	
RS803E1200	3	1"1/2	1"	End port	
RS804E1200	4	1"1/2	1"	End port	
RS805E1200	5	1"1/2	1"	End port	
RS806E1200	6	1"1/2	1"	End port	
RS807E1200	7	1"1/2	1"	End port	
RS801E1200SP	1	1"1/2	1"	Side port	
RS802E1200SP	2	1"1/2	1"	Side port	
RS803E1200SP	3	1"1/2	1"	Side port	
RS804E1200SP	4	1"1/2	1"	Side port	
RS805E1200SP	5	1"1/2	1"	Side port	
RS806E1200SP	6	1"1/2	1"	Side port	
RS807E1200SP	7	1"1/2	1"	Side port	

Rotary vane pump

Rotary vane pump ROTOFLOW is suitable to pump moderately aggressive water and liquids when there are small flow rates and high operating pressures. The body of the pump is made of brass, the rotor is in stainless steel AISI 303, graphite vanes. The pumps are equipped with by-pass and do not require any special maintenance. Suitable for applications such as small reverse osmosis systems, vending machines and espresso coffee machines.

TECHNICAL DATA

Model	Flow l/h 14 bar	Recommended motor	Code	Euro
PO104-BY PASS	100	C011500	PO104-BY-PASS	
PO204-BY PASS	200	C011500	PO204-BY-PASS	
PO304-BY PASS	300	C011500	PO304-BY-PASS	
PO404-BY PASS	400	C011500	PO404-BY-PASS	
PO701-BY PASS	700	SEMG71-4C	PO701-BY-PASS	
PO901-BY PASS	900	SEMG80-4B	PO901-BY-PASS	
PO1001-BY PASS	1.000	SEMG80-4B	PO1001-BY-PASS	

MOTORS FOR VANE PUMPS

TECHNICAL DATA

Model	Description	Drive	Code	Euro
C011500	MOTOR 245W 220V 50HZ	DIRECT	C011500	
SEMG71-4C	MOTOR 370W 220V 50HZ	FLEX. COUPL.	SEMG71-4C	
SEMG80-4B	MOTOR 550W 220V 50HZ	FLEX. COUPL.	SEMG80-4B	

ACCESSORIES FOR PUMP MOTORS

TECHNICAL DATA

Model	Description	Code	Euro
PO3000040	FLEX. COUPL. FOR SEMG71-4C	PO-3000040	
PO3000070	ADAPTER FOR SEMG71-4C	PO-3000070	
PO3000080	FLEX. COUPL. FOR SEMG80-4B	PO-3000080	
PO3000090	ADAPTER FOR SEMG80-4B	PO-3000090	

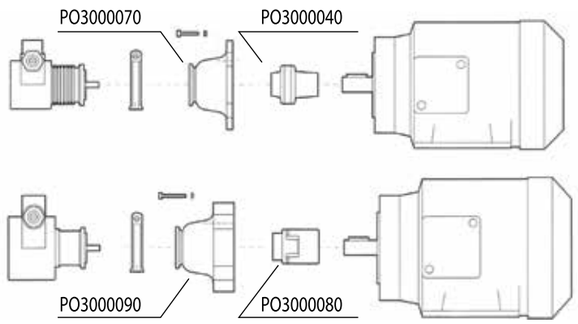

DE-SCALER FOR VANE PUMPS

NYTRA LC 1412 is a liquid product ready to use, suitable for the removal of calcium scales formed in vane and vibration pumps. In these systems, high pressure pumps often work in very critical conditions, this exposes them to a rapid process of scale with the creation of significant operational problems up to the blockage of the plant. NYTRA LC 1412 is a compound based on a balanced mix of organic and inorganic acids, wetting and anti-foam agents, with special corrosion inhibitors specific for the materials used in the construction of pressure vane and vibration pumps (brass, graphite, stainless steel, EPDM).

Model	Description	Pack./Pieces	Code	Euro
N1412-1	DE-SCALER FOR VANE PUMPS BOTT. 1L	12	N1412-1	

Flow meters

FLOW METERS LZT SERIES

Plastic flow meters with AISI 316 float. Precision 3%.

Code	Max. water flow	Connections	Dimensions (mm) l	h	Euro
LZT1G	4 l/min. - 240 l/h	1/2"	30	210	
LZT2G	7 l/min. - 420 l/h	1/2"	30	210	
LZT5G	18 l/min. - 1.080 l/h	1/2"	30	210	
LZT10G	35 l/min.- 2.100 l/h	1"	43	280	
LZT20G	70 l/min. - 4.200 l/h	1"	43	280	
LZT40G	150 l/min. - 9.000 l/h	1"	49	265	
LZT60G	250 l/min. - 15.000 l/h	1"1/2	66	302	
LZT100G	400 l/min. - 24.000 l/h	1"1/2	66	302	

FLOW METERS FL SERIES WITH DIRECT READING

Flow meters made of plexiglass with a calibrated and polished tapered conic hole. The float is made of AISI 316. Testing pressure 10 bar. Precision 3%.

Code	Max. water flow (l/h)	Connections	Dimensions (mm) A	B	C	Euro
FL-AM145R	120	1/4"	145	30	-	
FL300-R1	300	1/2"	127	35	35	
FL500-R1	500	1/2"	127	35	35	
FL1200-R2	1200	3/4"	160	40	40	
FL2000-R2	2000	1"	160	40	40	
FL4000-R3	4000	1"	190	40	40	
FL6000-R4	6000	1"	190	40	40	
FL8000-R4	8000	1"1/4	190	40	40	
FL12000-R4	12000	1"1/2	190	40	40	
FL15000-PL5	15000	2"	260	40	75	
FL20000-PL5	20000	2"	260	40	75	
FL30000-PL5	30000	2"1/2	260	40	75	

FL-AM145R

FLOW METERS

Compact, lightweight and inexpensive Flow meters. The reading of measurements can be carried out thanks to a transparent, shock absorbent indicator. It is suitable for the control and measure of great flow rates with cramped conditions. Maintenance and cleaning is particularly easy. Max working pressure PN10. On request PN25. "PD" series flow meters are suitable for water treatment plants, pressure group for fire protection systems, Oenology plants, Thermotechnology, etc.. This flow meters can be connected by flanges in line with UNI EN ISO 1092-1 and they are in compliance with UNI 5167-1 and UNI 12845. Precision ± 5%.

Code	Max flow rate (m³/h)	DN	A	B	Euro
PD-40	32	40	92	110	
PD-50	70	50	107	120	
PD-65	110	65	127	130	
PD-80	180	80	142	138	
PD-100	250	100	162	149	
PD-125	400	125	192	164	
PD-150	520	150	218	177	
PD-200	900	200	273	205	

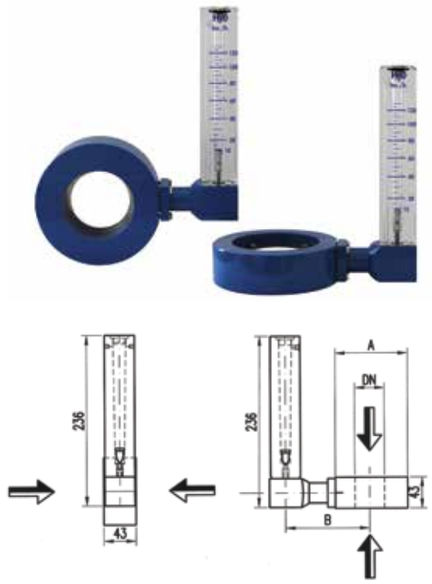

PRESSURE SWITCHES

Pressure switches suitable to signal the lack of water in a plant (minimum pressure) to avoid damage to the pump (MA-GP600) or to indicate excessive pressure in the system (MA-XP601).

Technical data: Burst pressure: 36 bar; Calibration: uphill (GP 600), downhill (XP-601); Standard tolerance on calibration values 0.2 bar; Max temperature: 85° C; Nominal voltage 250V A.C.; Electrical connection Fast-On 6,3x0,8; Electrical contacts 10A 250Vac; Thread 1/4 "gas; Shell: techno-polymer; Overcap rubber NBR; IP45 protection; IMQ approval N° EA454.

Code	Description	Euro
MA-GP600	MIN PRESSURE GAUGE BRASS 0.5 – 1.5 bar	
MA-XP601	MAX PRESSURE GAUGE INOX AISI 316 9-15 bar	
MA-EPDM	OVERCAP	

NEEDLE VALVES IN STAINLESS STEEL AISI 316

Needle valves S3000 in stainless steel AISI 316 for fluid and steam. Operating temperature max 100°C, operating pressure max 100 bar.

Code	I/O connections	Seat diameter	Euro
DS1/4	1/4"	6	
DS3/8	3/8"	6,5	
DS1/2	1/2"	8	
DS3/4	3/4"	12	
DS1	1"	15	
DS1-1/2	1"1/2	24	
DS2	2"	28	

Manometers

GLYCERINE FILLED PRESSURE GAUGES

Pressure gauge DN 63 glycerine filled, rear or radial connection, stainless steel case, glycerol anti- vibration fluid 98%, protection IP 65, tubular spring in copper alloy, brass pressure amplifier.

F350R

F352P

Code	Description	Connection	Euro
F350R	PRESS. GAUGE RADIAL CONN. 0/6 bar	1/4"	
F351R	PRESS. GAUGE RADIAL CONN. 0/16 bar	1/4"	
F352P	PRESS. GAUGE REAR CONN. 0/6 bar	1/4"	
F353P	PRESS. GAUGE REAR CONN. 0/16 bar	1/4"	

Brass solenoid valves

SOLENOID VALVES

Brass solenoid valves for water or air. Pressure MAX 16 bar.

Code	Description	Euro
EV-B205DBZ	SOLENOID VALVE 1/2" N.C.	
EV-B222DBY	SOLENOID VALVE 1" N.C.	
EV-2200	BOBIN 24V-AC	
EV-2250	BOBIN 24V-DC	
EV-2700	COIL 230V-AC	
EV-CONN	COIL CONNECTOR	

Technical data

Working pressure:	0,3 - 16 bar
Flow (l/min):	63 (1/2") 216 (1")
Fluid:	water/oil/air
Fluid temperature:	-10° C ... +90° C
Room temperature:	-10° C ... +50° C
Body material:	brass (CW617N EN 12165)
Pilot material:	S.S.
Bound pilot material:	FKM
Principal shutter:	NBR
Coil power:	CA10VA (working) CA 16VA (inrush)
Protection lvl:	IP 65 (with connector)

Plastic solenoid valves

Plastic solenoid valves for water, insulation class II.

TECHNICAL DATA

Model	Connections	Type	Coil	Feed	Power	Max flow rate
RE-1/2"-230VAC	1/2" F	N/A	230V/50Hz	28,5 mA	6,55 VA	2000 l/h
RE-1"-230VAC	1" F	N/A	230V/50Hz	28,5 mA	6,55 VA	8000 l/h
RE-1"-24VDC	1" F	N/A	24V - DC	240 mA	5,7 W	8000 l/h
RE-2"-24VDC	2" F	N/A	24V - DC	240 mA	5,7 W	18000 l/h
RE-3"-24VDC	3" M	N/A	24V - DC	240 mA	5,7 W	25000 l/h

Code	Euro
RE-1/2"-230VAC	
RE-1"-230VAC	
RE-1"-24VDC	
RE-2"-24VDC	
RE-3"-24VDC	

Technical data

Valve body:	Polyamide 30% fibreglass
Membrane:	NBR
Nucleus:	SS
Coil:	Insulated IP 55
Work pressure:	0,5 – 10 bar
Temperature:	Max 60°C